SURVEYED BY _____
SUPERVISED BY_____
DESIGNED BY_____

DESIGN FEATURES RELATING TO CONSTRUCTION OR TO REGULATION AND CONTROL OF TRAFFIC MAY BE SUBJECT TO CHANGE AS DEEMED NECESSARY BY THE DEPARTMENT

REVISED	STATE	FEDERAL AID PROJECT	STATE ROUTE	STATE PROJECT	SHEET NO.
NEW 7/17/08	VA.		7		20(9)

IN PROGRESS 10/15/08
NOT FOR CONSTRUCTION

TYPICAL 4'X6'X4' VAULT VERIZON

ROTONDO PRECAST - VIRGINIA DIVISION

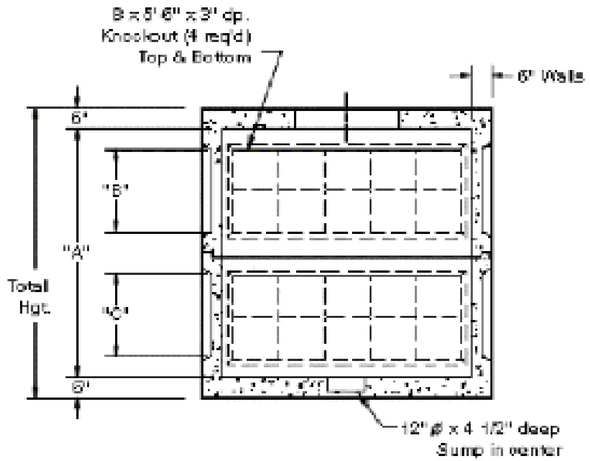

SECTION A - A

Communication Vault
Model No. BA4X6
4'-0" x 6'-0" x Varies
Two Piece Design
Bell Atlantic

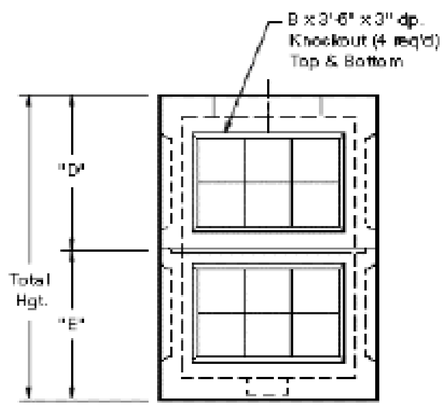

END VIEW

Communication Vault
Model No. BA4X6
4'-0" x 6'-0" x Varies
Two Piece Design
Bell Atlantic

3B1122_0.dwg

OUS ON-TIME UTILITY SOLUTIONS, LLC

UTILITY RELOCATION PLAN
4'X6'X4' VAULT

PLAN NO.	PROJECT	FILE NO.	SHEET NO.
			20(9)