SURVEYED BY_____
SUPERVISED BY_____
DESIGNED BY_____

DESIGN FEATURES RELATING TO CONSTRUCTION OR TO REGULATION AND CONTROL OF TRAFFIC MAY BE SUBJECT TO CHANGE AS DEEMED NECESSARY BY THE DEPARTMENT

REVISED	STATE	FEDERAL AID PROJECT	STATE ROUTE	STATE PROJECT	SHEET NO.
NEW 7/17/08	VA.		7		20(4)

IN PROGRESS 10/15/08
NOT FOR CONSTRUCTION

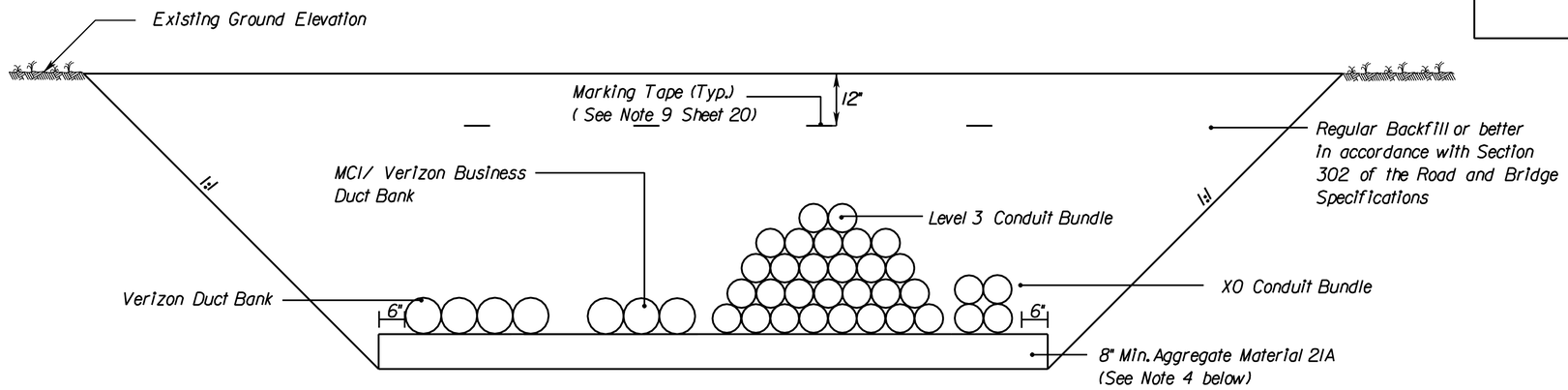

DUCT BANK TRENCH DETAIL SOUTHEAST QUADRANT ALONG ROUTE 7

NOTES:

1. TYPICAL 4 INCH PVC SCHEDULE 40 CONCRETE ENCASED DUCT BANK NUMBER OF CONDUITS WILL VARY DEPENDING ON DUCT BANK REQUIREMENTS.

2. AFTER INSTALLATION, ALL DUCT MUST BE THOROUGHLY CLEANED TO ENSURE THAT ALL SMALL PEBBLES, SAND OR OTHER FOREIGN MATERIAL ARE REMOVED BEFORE CABLE INSTALLED. ALL CONDUITS ARE THEN TO CONTAIN "POLYOLEFIN" 1000 POUND STRESS PULL LINES, TO ACCOMMODATE THE PULLING CABLE.

3. ALL CONCRETE ENCASEMENT TO BE CLASS A3.

4. SUBSTITUTE NO. 57 STONE FOR AGGREGATE MATERIAL 21A IF STANDING OR RUNNING WATER IS PRESENT WHEN UTILITY TRENCH IS EXCAVATED AT NO ADDITIONAL COST TO THE DEPARTMENT. THE DEPTH OF EXCAVATION MAY NEED TO BE INCREASED WHERE SHOWN ON THE PLANS IN ORDER TO REMOVE UNSUITABLE MATERIAL. UNSUITABLE MATERIAL SHALL BE REMOVED AND DISPOSED OF OFFSITE AND REPLACED WITH AGGREGATE NUMBER 57 STONE, THE COST OF WHICH IS INCIDENTAL TO COMMUNICATION DUCT BANK.

express-tek
EXPRESS TECHNOLOGIES, INC.
1127 INTERNATIONAL PARKWAY SUITE 293
FREDERICKSBURG, VA 22406
540.752.6691 (O) 540.752.6694 (F)

OUS
ON-TIME UTILITY SOLUTIONS, LLC
44350 MERCURE CIRCLE, SUITE 140
DULLES, VIRGINIA 20166

UTILITY RELOCATION PLAN
COMMUNICATION DUCT BANK DETAILS

PLAN NO.	PROJECT	FILE NO.	SHEET NO.
			20(4)