SURVEYED BY _____
SUPERVISED BY _____
DESIGNED BY _____

DESIGN FEATURES RELATING TO CONSTRUCTION OR TO REGULATION AND CONTROL OF TRAFFIC MAY BE SUBJECT TO CHANGE AS DEEMED NECESSARY BY THE DEPARTMENT

REVISED	STATE	FEDERAL AID PROJECT	STATE ROUTE	STATE PROJECT	SHEET NO.
NEW 7/17/08	VA.		7		20(7)

IN PROGRESS 10/15/08
NOT FOR CONSTRUCTION

TYPICAL 4'X4'X4' VAULT LEVEL 3 AND XO

TYPICAL 4'x4'x4' MANHOLE DETAIL

MANHOLE COVER

WESTERN IRONWORKS #B-30

NOTE:

1. EACH COVER TO HAVE (4) PICK SLOTS FOR REMOVAL.
2. STAMP "TCS" IN COVER.
3. ACCESS HOLE: 30"

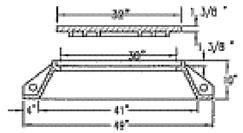

RING AND COVER DETAIL

RING WT.: 380 LBS. COVER WT.: 300LBS.

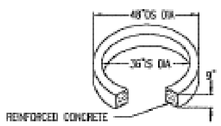

TYPICAL NECK EXTENSION DETAIL

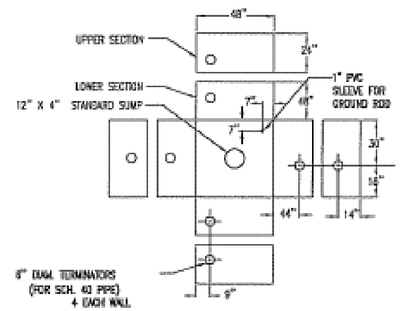

MANHOLE 4'Lx4'Wx4'H

(2 SECTIONS)

PLAN VIEW: TERMINATORS, SUMP, & GROUND ROD SLEEVE

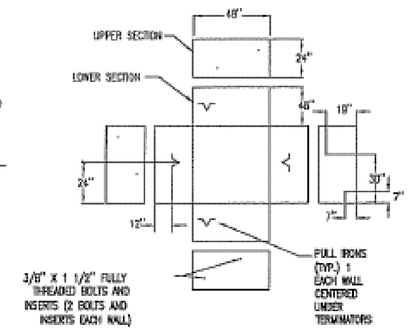

MANHOLE 4'Lx4'Wx4'H

(2 SECTIONS)

PLAN VIEW:

BOLT INSERTS & PULL IRONS

NOTE:
INSERT SPACING ARRANGED FOR FIBER OPTIC CABLE "3M" SPLICE CASE.

4'x4'x6' DALWORTH QUICKSET MANHOLE (OR 4'X4'X2' MANHOLE)

6" WALLS AND 48" HEADROOM

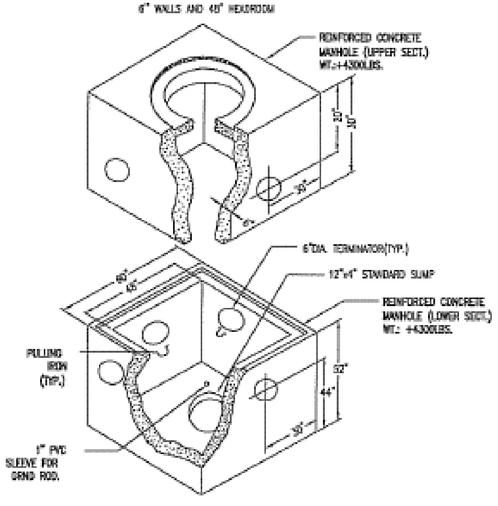

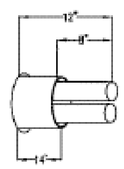

CONSTRUCTION NOTES:

1. VOID IN EXCAVATED AREAS TO BE BACKFILLED WITH SELECT MATERIAL.
2. BOTTOM OF EXCAVATED PIT TO BE BACKFILLED WITH 12" OF CRUSHED STONE (3/4" GRADE).
3. SHORING WILL BE REQUIRED.
4. ALL MANHOLES SHALL BE PLACED WITH COVER FLUSH WITH EXISTING GRADE.

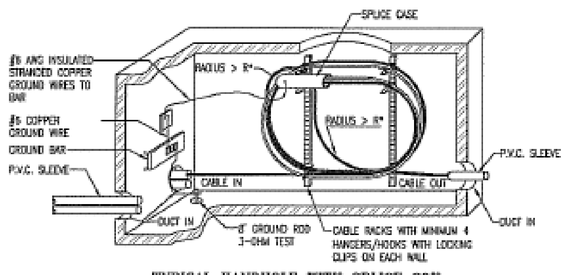

TYPICAL HANDHOLE WITH SPLICE COIL

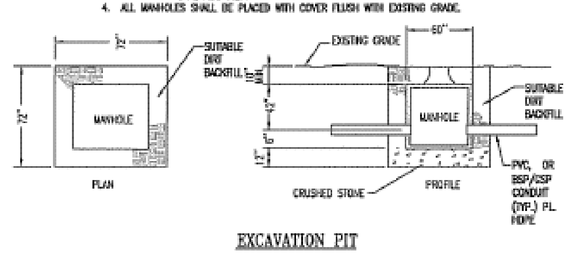

EXCAVATION PIT

express-tek
EXPRESS TECHNOLOGIES, INC.
1127 INTERNATIONAL PARKWAY SUITE 293
FREDERICKSBURG, VA 22406
540.752.6691 (O) 540.752.6694 (F)

UTILITY RELOCATION PLAN
4'X4'X4' VAULT

PLAN NO.	PROJECT	FILE NO.	SHEET NO.
			20(7)