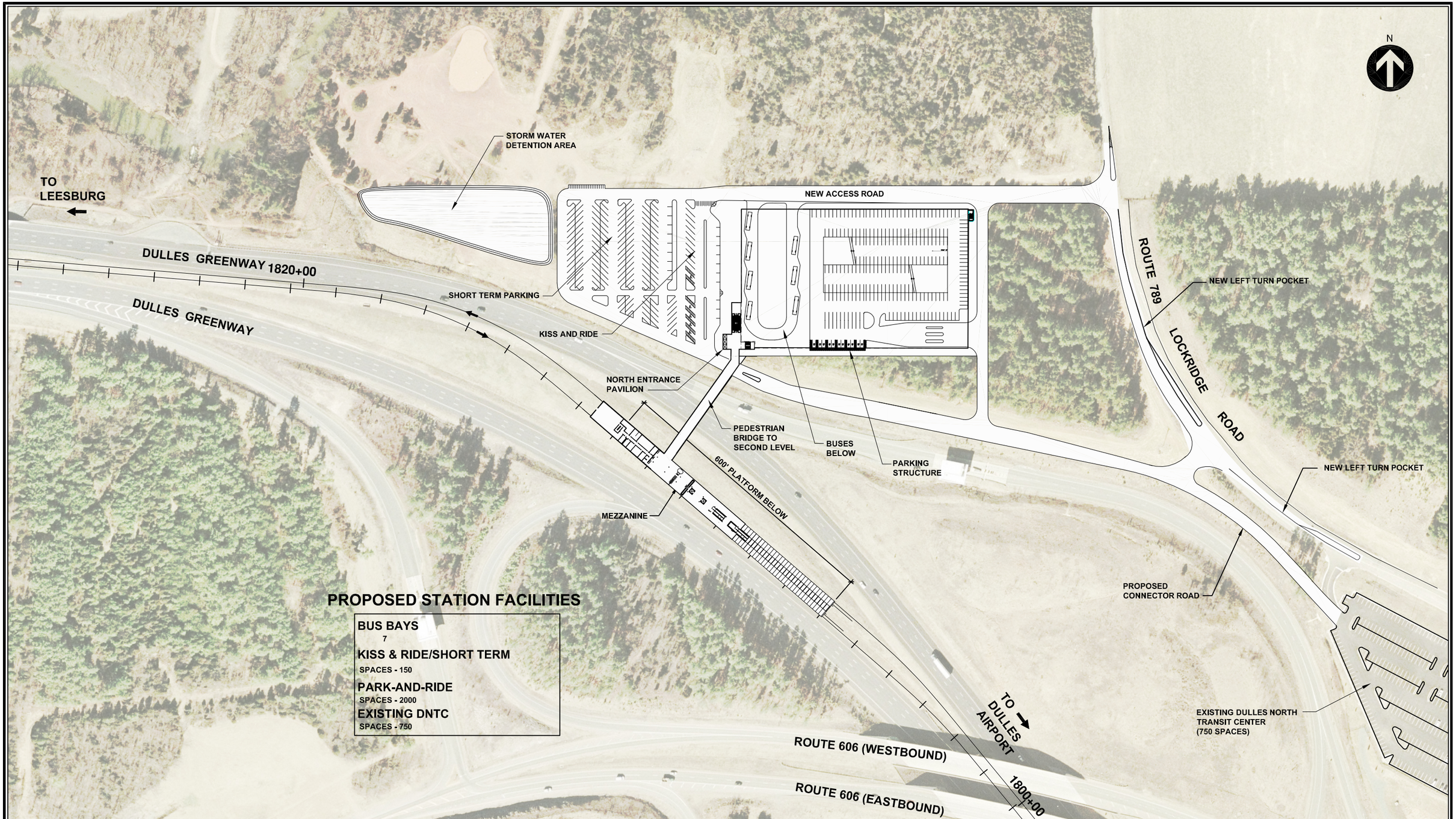


HALF-SIZE DRAWING

CONTRACT NO.:

| | | |
|---|---|---|
| DESIGNED: | GP | 12-03 DATE |
| DRAWN: | GP | 12-03 DATE |
| CHECKED: | | DATE |
| APPROVED: | | DATE |

| REFERENCE DRAWINGS | |
|---|---|
| NUMBER | DESCRIPTION |

| REVISIONS | | |
|---|---|---|
| DATE | BY | DESCRIPTION |

DULLES CORRIDOR RAPID TRANSIT PROJECT

CAPITAL TRANSIT CONSULTANTS

SUBMITTED

Diana C. Mendes

PROJECT MANAGER

FINAL GENERAL PLANS
JULY 2004

SITE PLAN
ROUTE 606 STATION – LPA

SCALE: 1"=100' (50 0 50 100)

DRAWING NO.: GPN-A-100-R606

019

\\D2psvr02\CTC CAD\002_dulles\FEIS GenPlans 06-04\Facilities\rt 606\Route-606-site.dwg, half size, 08/05/04 09:47:22 AM, lbiebele\N

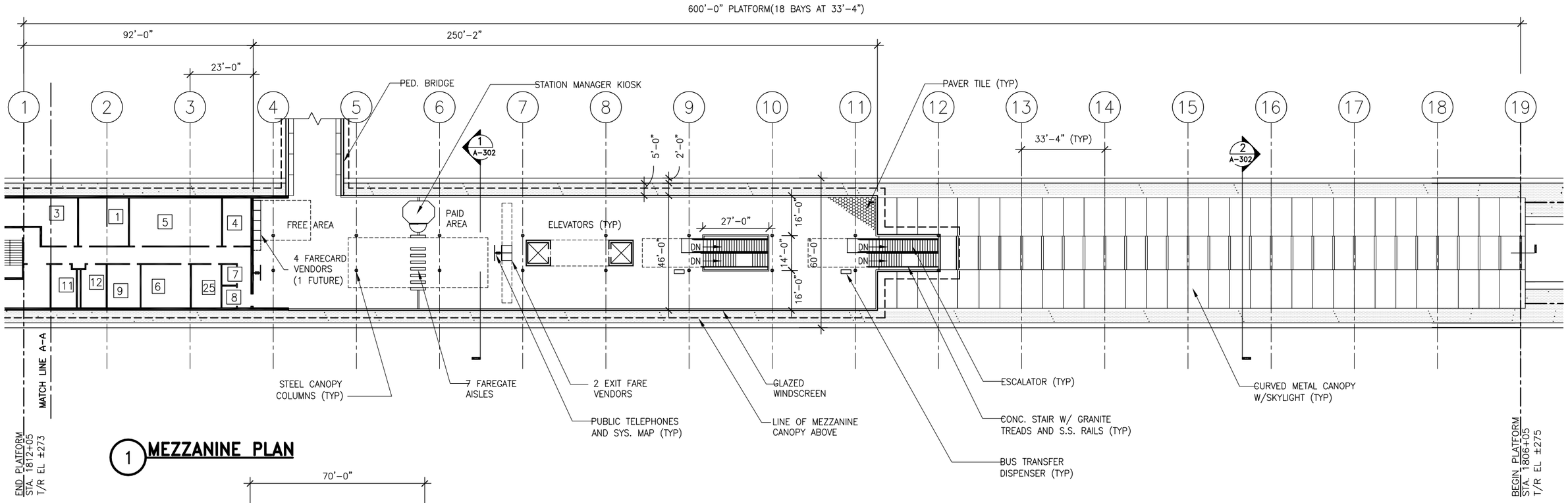


## 1 MEZZANINE PLAN

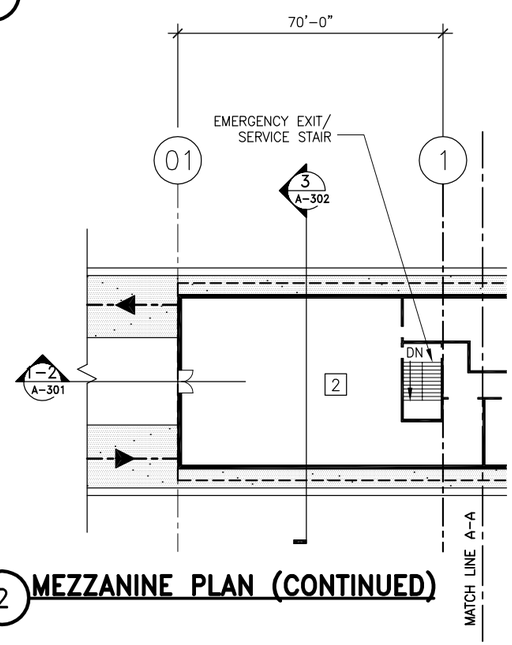


## 2 MEZZANINE PLAN (CONTINUED)

NOTE:
SEE DWG. NO. GPN-G-002 FOR SYMBOLS, SERVICE ROOM SCHEDULE AND ABBREVIATIONS.

HALF-SIZE DRAWING

CONTRACT NO.:

| DESIGNED: W. GALLAGHER 3-15-02 DATE | REFERENCE DRAWINGS | | REVISIONS | | |
|---|---|---|---|---|---|
| DRAWN: B. LIOANAG 3-15-02 DATE | NUMBER | DESCRIPTION | DATE | BY | DESCRIPTION |
| CHECKED: DATE | | | | | |
| APPROVED: DATE | | | | | |

DULLES CORRIDOR RAPID TRANSIT PROJECT

CAPITAL TRANSIT CONSULTANTS
SUBMITTED
Diana C Mendes
PROJECT MANAGER

FINAL GENERAL PLANS
JULY 2004

MEZZANINE PLAN
ROUTE 606 STATION

SCALE: 1"=20' (10 0 10 20)

DRAWING NO.: GPN-A-200-R606

020

\\D2psvr02\CTC CAD\002_dulles\FEIS GenPlans 06-04\Facilities\rt 606\gpn-a-200-R606.dwg, MEZZANINE, 07/29/04 03:38:01 PM, lbiebelen

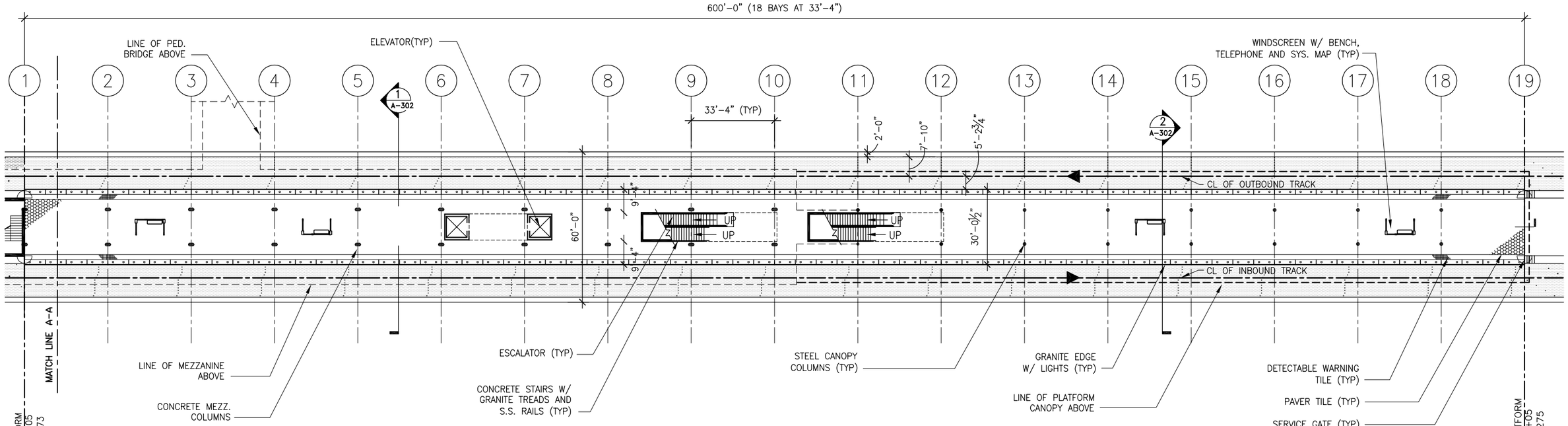


## 1 PLATFORM PLAN

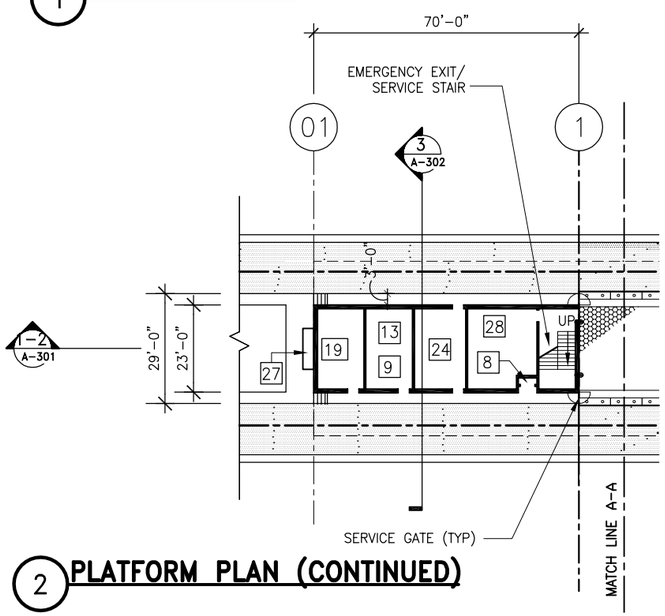


## 2 PLATFORM PLAN (CONTINUED)

NOTE:
SEE DWG. NO. GPN-G-002 FOR SYMBOLS, SERVICE ROOM SCHEDULE AND ABBREVIATIONS.

HALF-SIZE DRAWING

CONTRACT NO.:

| | | |
|---|---|---|
| DESIGNED: | W. GALLAGHER | 3-15-02 DATE |
| DRAWN: | B. LIOANAG | 3-15-02 DATE |
| CHECKED: | | DATE |
| APPROVED: | | DATE |

| REFERENCE DRAWINGS | |
|---|---|
| NUMBER | DESCRIPTION |

| REVISIONS | | |
|---|---|---|
| DATE | BY | DESCRIPTION |

DULLES CORRIDOR RAPID TRANSIT PROJECT

CAPITAL TRANSIT CONSULTANTS
SUBMITTED
Diana C. Mendes
PROJECT MANAGER

FINAL GENERAL PLANS
JULY 2004

PLATFORM PLAN
ROUTE 606 STATION

SCALE: 1"-20'

DRAWING NO.: GPN-A-201-R606

021

\\D2psvr02\CTC CAD\002_dulles\FEIS GenPlans 06-04\Facilities\rt 606\gpn-a-201-R606.dwg, PLATFORM, 07/29/04 03:57:50 PM, lbiebeleN

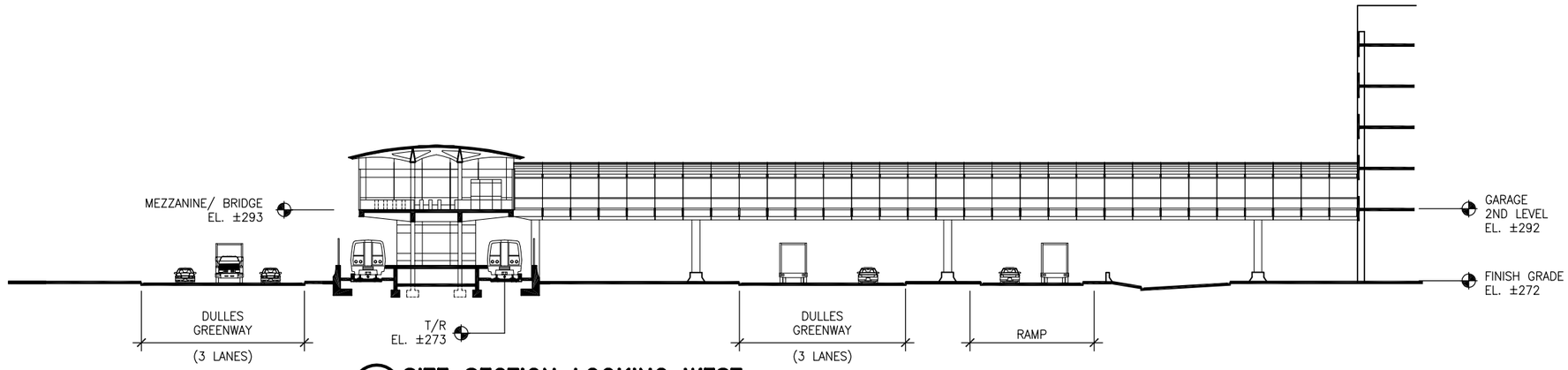


## 1 SITE SECTION LOOKING WEST

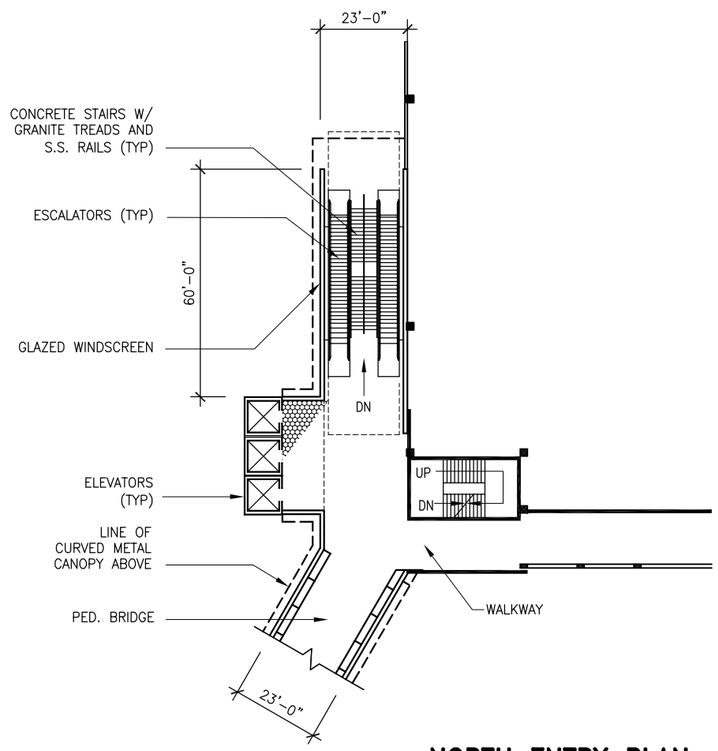


## 2 NORTH ENTRY PLAN (BRIDGE LEVEL)

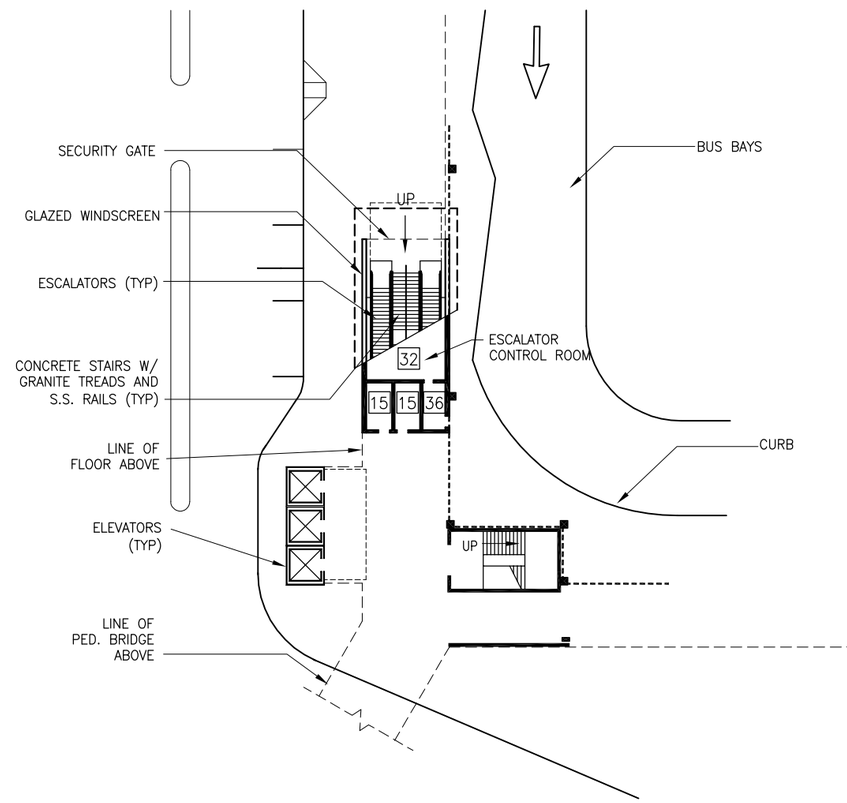


## 3 NORTH ENTRY PLAN (GROUND LEVEL)

N

NOTE:
SEE DWG. NO. GPN-G-002 FOR SYMBOLS,
SERVICE ROOM SCHEDULE AND ABBREVIATIONS.

HALF-SIZE DRAWING

CONTRACT NO.:

| | | |
|---|---|---|
| DESIGNED: W. GALLAGHER | 3-15-02 | DATE |
| DRAWN: B. LIOANAG | 3-15-02 | DATE |
| CHECKED: | | DATE |
| APPROVED: | | DATE |

| REFERENCE DRAWINGS | | REVISIONS | | |
|---|---|---|---|---|
| NUMBER | DESCRIPTION | DATE | BY | DESCRIPTION |
| | | | | |

DULLES CORRIDOR RAPID TRANSIT PROJECT

CAPITAL TRANSIT CONSULTANTS

SUBMITTED

Diana C. Mendes
PROJECT MANAGER

FINAL GENERAL PLANS
JULY 2004

SITE SECTION/ ENTRY PLANS
ROUTE 606 STATION

SCALE: 1"=20' (10 0 10 20)

DRAWING NO.: GPN-A-300-R606

022

\\D2psvr02\CTC CAD\002_dulles\FEIS GenPlans 06-04\Facilities\rt 606\gpn-a-300-R606.dwg, SITE SECTION, 07/29/04 04:04:19 PM, IbiebeleN

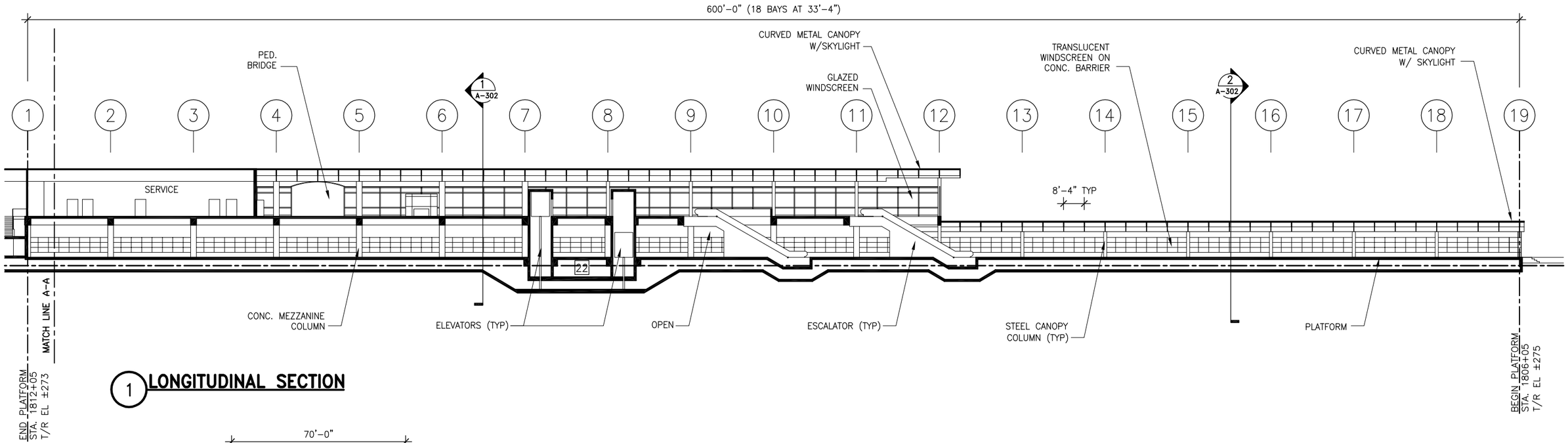


## 1 LONGITUDINAL SECTION

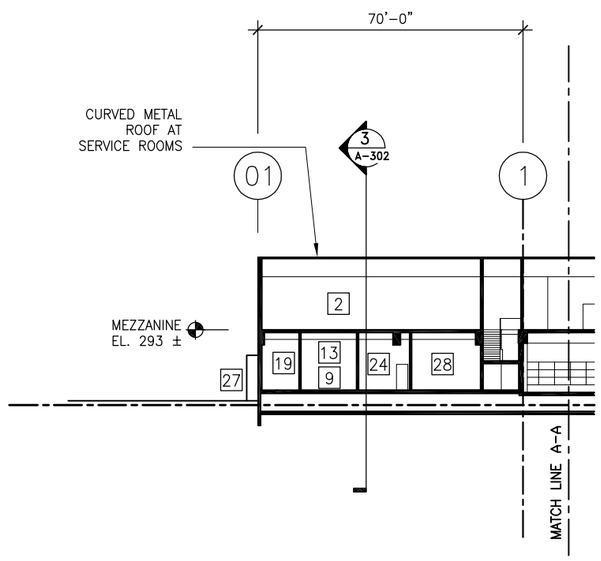


## 2 LONGITUDINAL SECTION (CONTINUED)

NOTE:
SEE DWG. NO. GPN-G-002 FOR SYMBOLS, SERVICE ROOM SCHEDULE AND ABBREVIATIONS.

HALF-SIZE DRAWING

CONTRACT NO.:

| | | |
|---|---|---|
| DESIGNED: W. GALLAGHER | 3-15-02 | DATE |
| DRAWN: B. LIOANAG | 3-15-02 | DATE |
| CHECKED: | | DATE |
| APPROVED: | | DATE |

| REFERENCE DRAWINGS | |
|---|---|
| NUMBER | DESCRIPTION |

| REVISIONS | | |
|---|---|---|
| DATE | BY | DESCRIPTION |

DULLES CORRIDOR RAPID TRANSIT PROJECT

CAPITAL TRANSIT CONSULTANTS

SUBMITTED

Diana C. Mendes

PROJECT MANAGER

FINAL GENERAL PLANS
JULY 2004

LONGITUDINAL SECTION
ROUTE 606 STATION

SCALE: 1"=20' (10 0 10 20)

DRAWING NO.: GPN-A-301-R606

023

\\D2psvr02\CTC CAD\002_dulles\FEIS GenPlans 06-04\Facilities\rt 606\GPN-A-301-R606.dwg, SECT-LONG, 07/29/04 04:09:33 PM, lbiebeleN

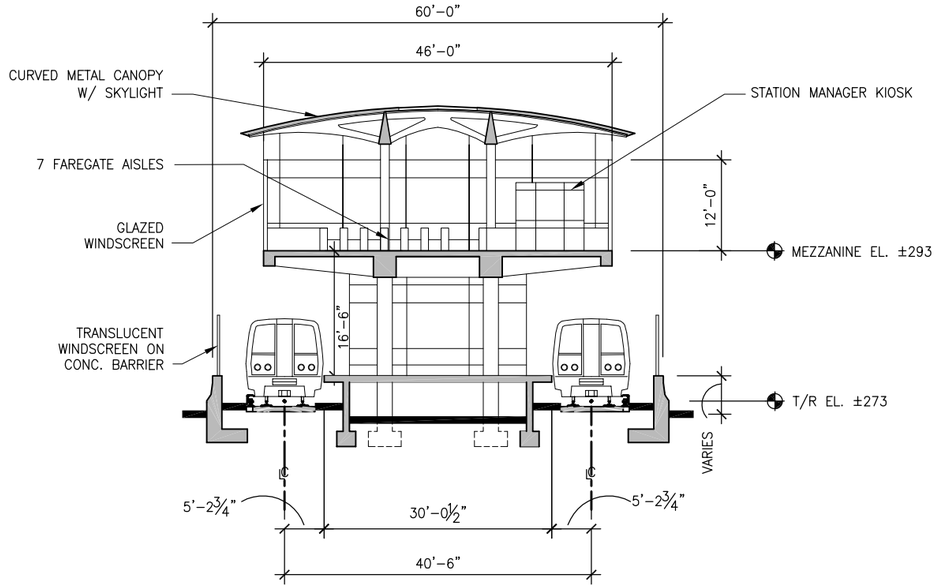


## 1 MEZZANINE TRANSVERSE SECTION

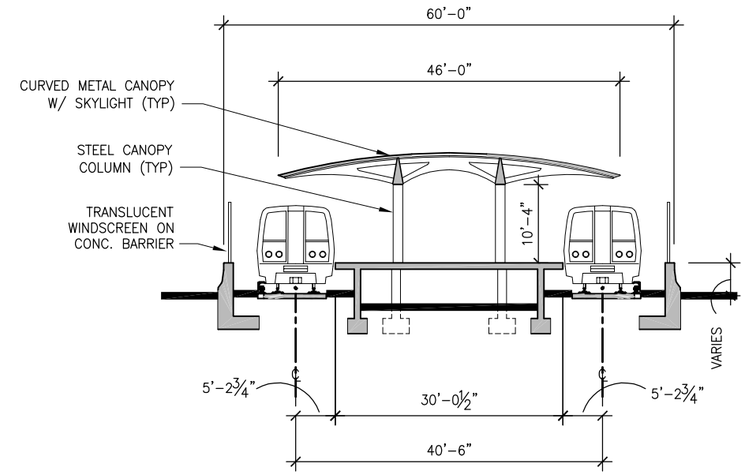


## 2 PLATFORM TRANSVERSE SECTION

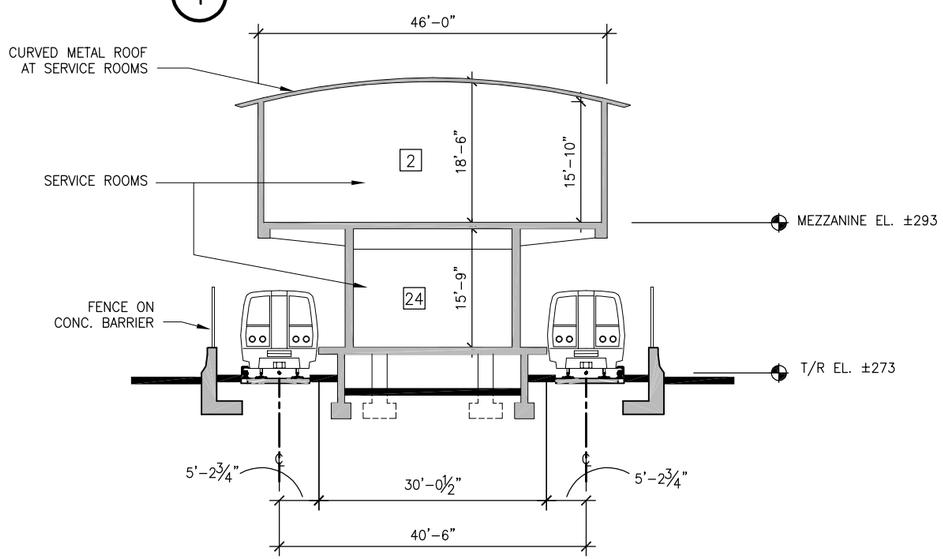


## 3 SERVICE ROOMS TRANSVERSE SECTION

NOTE:
SEE DWG. NO. GPN-G-002 FOR SYMBOLS, SERVICE ROOM SCHEDULE AND ABBREVIATIONS.

HALF-SIZE DRAWING

CONTRACT NO.:

DESIGNED: W. GALLAGHER 3-15-02 DATE
DRAWN: B. LIOANAG 3-15-02 DATE
CHECKED: DATE
APPROVED: DATE

| REFERENCE DRAWINGS | |
|---|---|
| NUMBER | DESCRIPTION |

| REVISIONS | | |
|---|---|---|
| DATE | BY | DESCRIPTION |

DULLES CORRIDOR RAPID TRANSIT PROJECT

CAPITAL TRANSIT CONSULTANTS
SUBMITTED
PROJECT MANAGER

FINAL GENERAL PLANS
JULY 2004

TRANSVERSE SECTIONS
ROUTE 606 STATION

SCALE: 1"=10' (5 0 5 10)
DRAWING NO.: GPN-A-302-R606
024

\\D2psvr02\CTC CAD\002_dulles\FEIS GenPlans 06-04\Facilities\rt 606\gpn-a-302-R606.dwg, SECT-CROSS, 07/29/04 04:14:36 PM, lbiebeleN

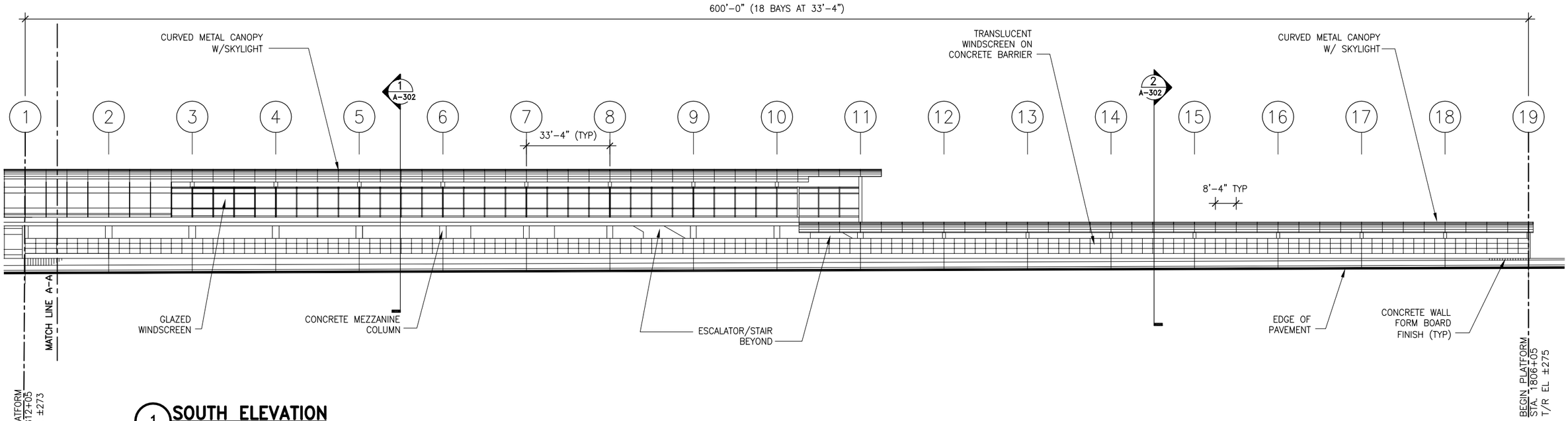


## 1 SOUTH ELEVATION

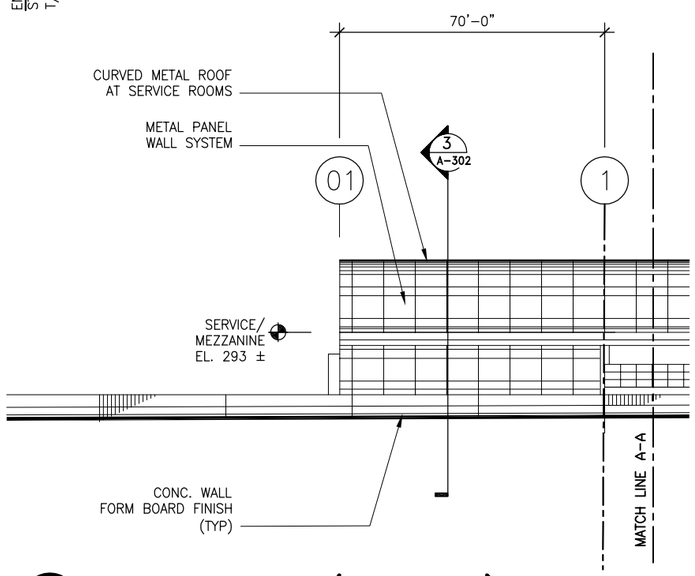


## 2 SOUTH ELEVATION (CONTINUED)

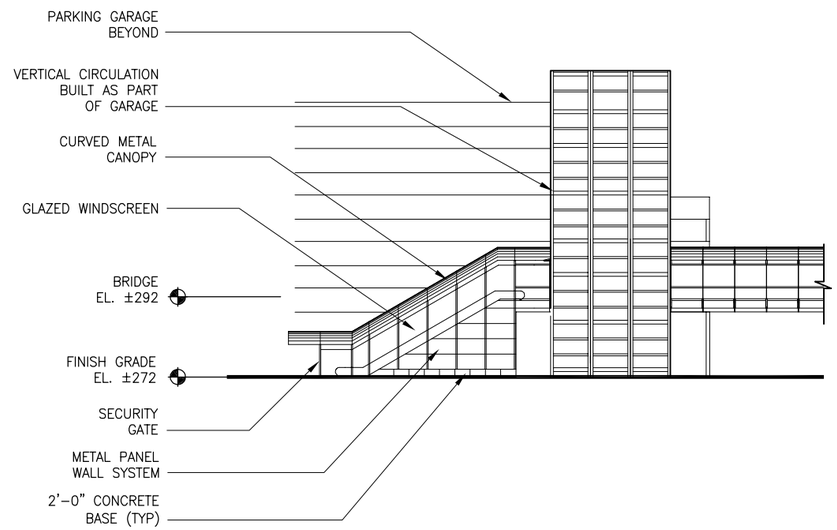


## 3 NORTH ENTRY ELEVATION WEST ELEVATION

NOTE:
SEE DWG. NO. GPN-G-002 FOR SYMBOLS, SERVICE ROOM SCHEDULE AND ABBREVIATIONS.

HALF-SIZE DRAWING

CONTRACT NO.:

DESIGNED: W. GALLAGHER 3-15-02 DATE
DRAWN: B. LIOANAG 3-15-02 DATE
CHECKED: DATE
APPROVED: DATE

| REFERENCE DRAWINGS | |
|---|---|
| NUMBER | DESCRIPTION |

| REVISIONS | | |
|---|---|---|
| DATE | BY | DESCRIPTION |

DULLES CORRIDOR RAPID TRANSIT PROJECT

CAPITAL TRANSIT CONSULTANTS
SUBMITTED
Diana C. Mendes
PROJECT MANAGER

FINAL GENERAL PLANS
JULY 2004

ELEVATIONS
ROUTE 606 STATION

SCALE: 1"=20' (10 0 10 20)
DRAWING NO.: GPN-A-303-R606
025

\\D2psvr02\CTC CAD\002_dulles\FEIS GenPlans 06-04\Facilities\rt 606\gpn-a-303-R606.dwg, ELEV, 07/29/04 04:29:11 PM, IbiebeleN

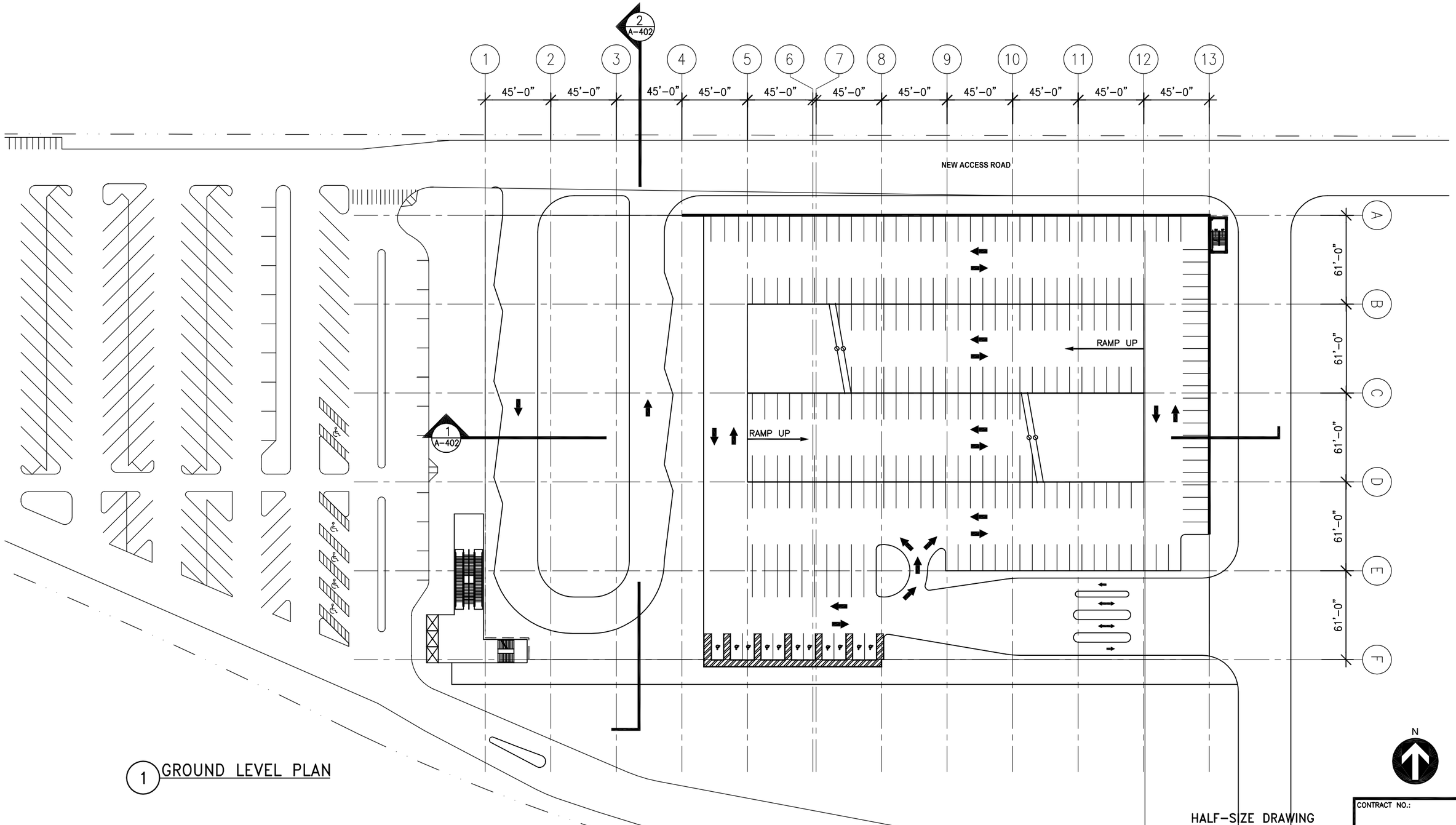


1 GROUND LEVEL PLAN

HALF-SIZE DRAWING

CONTRACT NO.:

| | | |
|---|---|---|
| DESIGNED: | S. Srouji | 10/10/03 DATE |
| DRAWN: | M. Duong | 10/14/03 DATE |
| CHECKED: | | DATE |
| APPROVED: | | DATE |

| REFERENCE DRAWINGS | |
|---|---|
| NUMBER | DESCRIPTION |

| REVISIONS | | |
|---|---|---|
| DATE | BY | DESCRIPTION |

DULLES CORRIDOR RAPID TRANSIT PROJECT

CAPITAL TRANSIT CONSULTANTS

SUBMITTED

Diana C Mendes

PROJECT MANAGER

FINAL GENERAL PLANS
JULY 2004

GROUND LEVEL PLAN
ROUTE 606 STATION PARKING GARAGE

SCALE: 1"=40'

20 0 20 40

DRAWING NO.: GPN-A-400-R606

026

\\D2psvr02\CTC CAD\002_dulles\FEIS GenPlans 06-04\Facilities\rt 606\GARAGE\606-grade111203.dwg, route606, 07/29/04 04:33:27 PM, IbiebeleN

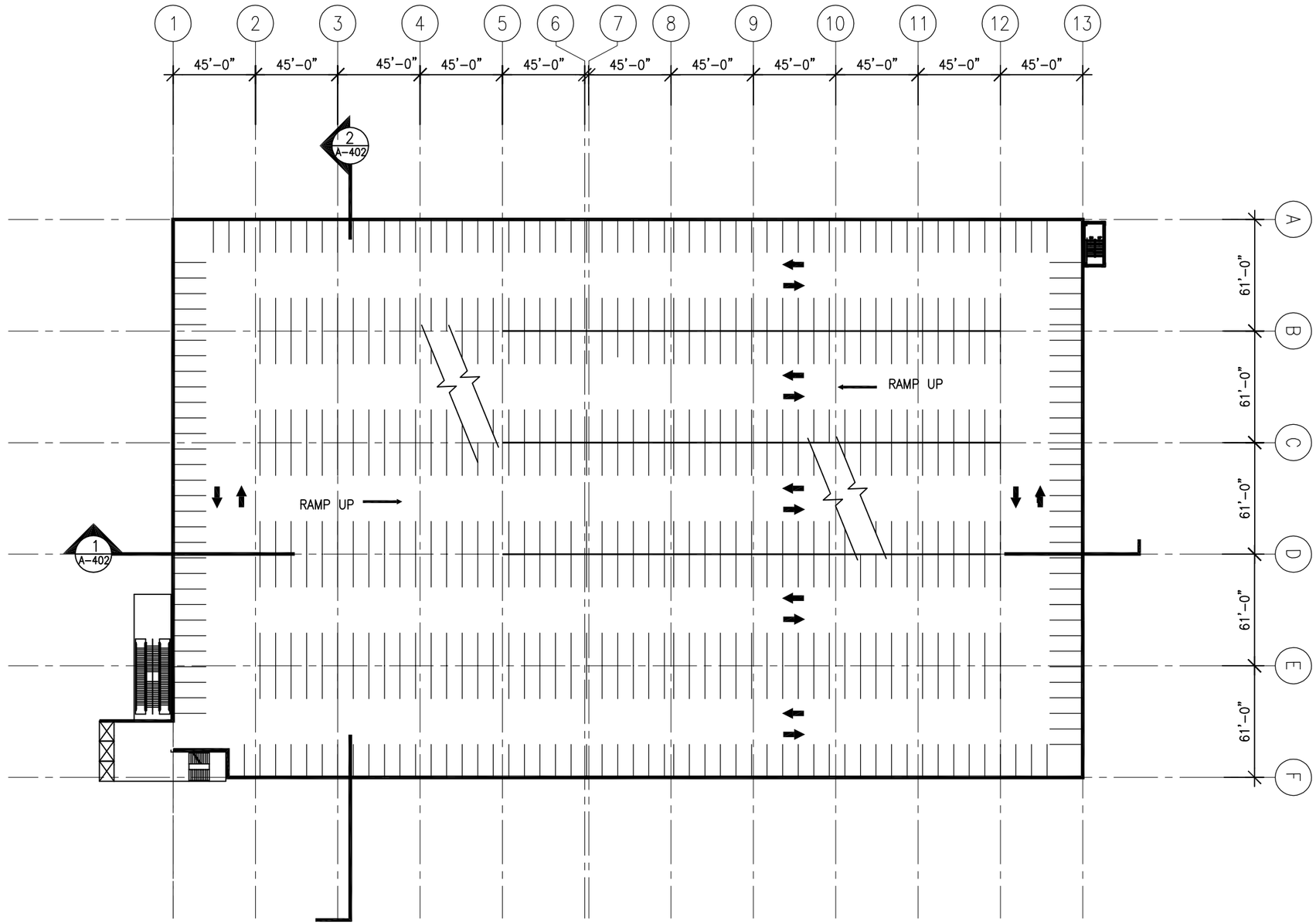


1 TYPICAL LEVEL PLAN

HALF-SIZE DRAWING

CONTRACT NO.:

| | | |
|---|---|---|
| DESIGNED: S. Srouji | 10/10/03 | DATE |
| DRAWN: M. Duong | 10/14/03 | DATE |
| CHECKED: | | DATE |
| APPROVED: | | DATE |

| REFERENCE DRAWINGS | |
|---|---|
| NUMBER | DESCRIPTION |

| REVISIONS | | |
|---|---|---|
| DATE | BY | DESCRIPTION |

DULLES CORRIDOR RAPID TRANSIT PROJECT

CAPITAL TRANSIT CONSULTANTS

SUBMITTED

Diana C Mendes

PROJECT MANAGER

FINAL GENERAL PLANS
JULY 2004

TYPICAL LEVEL PLAN
ROUTE 606 STATION PARKING GARAGE

SCALE: 1"=40' 20 0 20 40

DRAWING NO.: GPN-A-401-R606

027

\\D2psvr02\CTC CAD\002_dulles\FEIS GenPlans 06-04\Facilities\rt 606\Garage\606-typ111203.dwg, route606, 07/29/04 04:34:30 PM, IbiebeleN

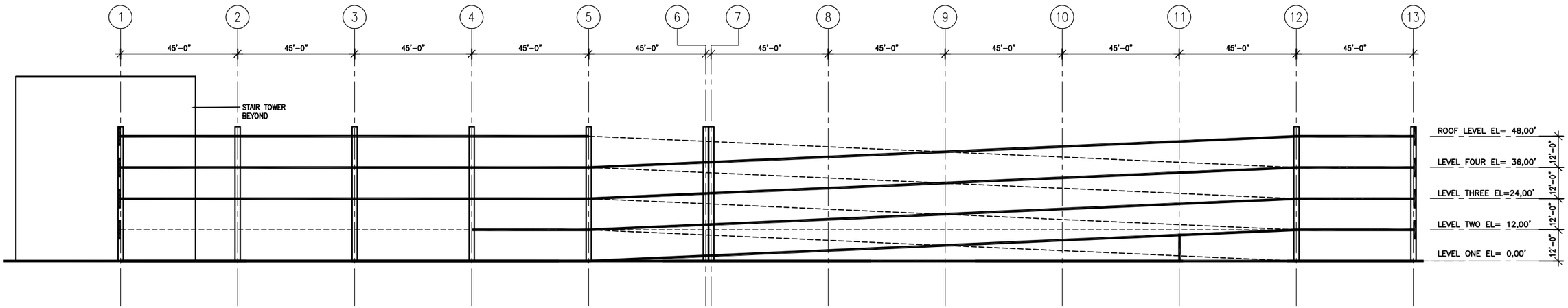


1 LONGITUDINAL SECTION
A-400&401

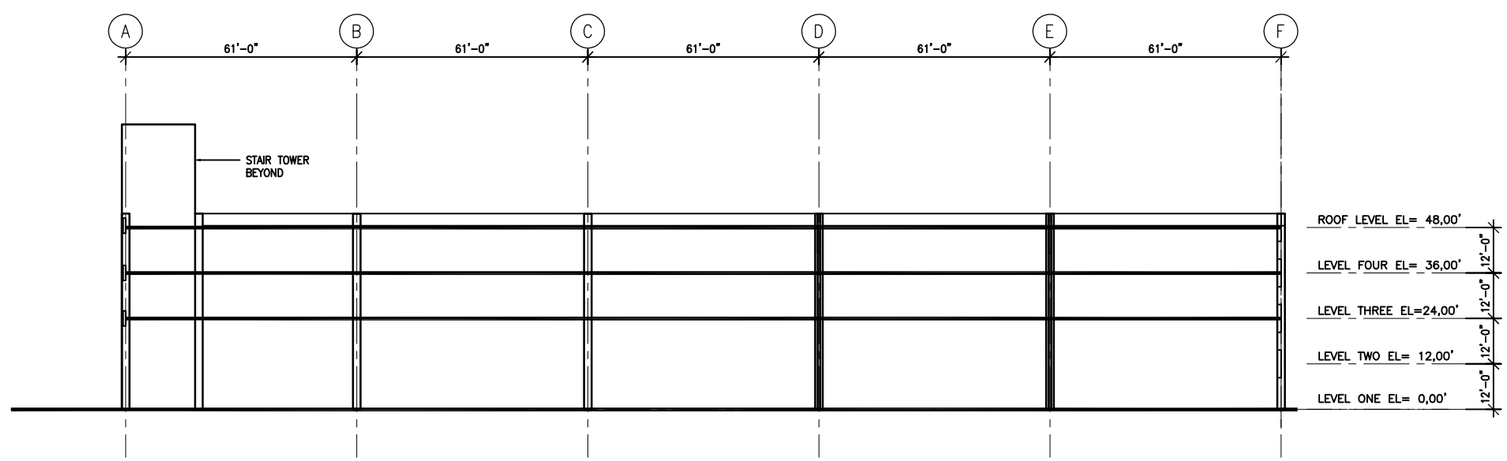


2 CROSS SECTION
A-400&401

HALF-SIZE DRAWING

CONTRACT NO.:

DESIGNED: S. Srouji DATE
DRAWN: DATE
CHECKED: DATE
APPROVED: DATE

| REFERENCE DRAWINGS | |
|---|---|
| NUMBER | DESCRIPTION |

| REVISIONS | | |
|---|---|---|
| DATE | BY | DESCRIPTION |

DULLES CORRIDOR RAPID TRANSIT PROJECT

CAPITAL TRANSIT CONSULTANTS
SUBMITTED
Diana C. Mendes
PROJECT MANAGER

FINAL GENERAL PLANS
JULY 2004

SECTIONS
ROUTE 606 STATION PARKING GARAGE

SCALE: 1"=20'
10 0 10 20

DRAWING NO.: GPN-A-402-R606

028

\\D2psvr02\CTC CAD\002_dulles\FEIS GenPlans 06-04\Facilities\rt 606\Garage\606-section1111203.dwg, 24x36 size, 07/29/04 04:37:04 PM, lbiebelen