The Town of Leesburg in Virginia — DESIGN AND CONSTRUCTION STANDARD

ARTICLE 4-130.6E

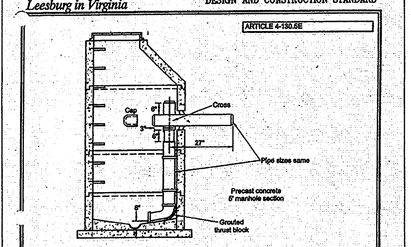

NOTES:

A. The cage shall be secured to the drop fitting with 2' of galvanized or other non-rusting chain secured with two stainless steel machine screws, nuts and washers.

B. The pipe shall be chamfered to an angle of 15° before cementing in place.

C. The diameter of the vertical stack shall not be less than 6".

D. Exterior of manhole to be asphalt coated.

E. Use 4' manhole for pipes up to 8". Larger drop pipes will require a 5' manhole.

F. The vertical stack shall be strapped to the manhole at the joint when more than one section of pipe is used. The strap shall be of a non-corrosive material.

G. The elbow at the bottom of the stack may be either a 45° or 90° turn placed in the direction of flow in the manhole with a bench constructed to conform to the manhole bench.

F. See SS-7 for manhole detail.

Not To Scale

REVISIONS NO.	DATE			INSIDE DROP CONNECTION	DRAWING SS-9 PAGE 39

The Town of Leesburg in Virginia — DESIGN AND CONSTRUCTION STANDARD

ARTICLE 4-130.6F

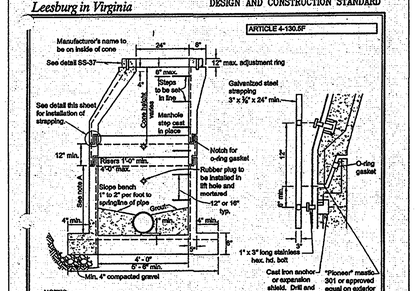

NOTES:

A. Base section to provide minimum 6' clearance between the top of the pipe opening and bottom of bell and spigot joint.

B. In all areas, base section footing must be spread a minimum of 8".

C. Strapping of manhole to be used where within limit of 100-year floodplain.

D. Exterior of manhole to be asphalt coated.

E. Fasten the frame to cone per detail SS-37.

F. Use two strands of 1" roll mastic between the cone and frame (RV-30).

G. Use roll mastic between manhole sections.

Not To Scale

REVISIONS NO.	DATE			TYPICAL 4' - 0" I.D. PRECAST CONCRETE MANHOLE	DRAWING SS-7 PAGE 37

The Town of Leesburg in Virginia — DESIGN AND CONSTRUCTION STANDARD

ARTICLE 4-130.8M

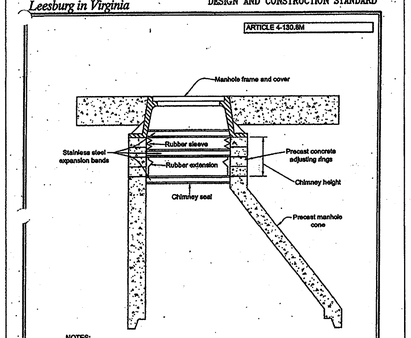

NOTES:

A. For use in all sanitary sewer manholes or appurtenances. The chimney seal may be omitted upon specific approval of the director in isolated locations when infiltration is highly unlikely.

B. Applicable to both eccentric or concentric manhole covers.

C. Approved internal seals shall be installed unless an external seal is specifically approved for installation by the director.

Not To Scale

REVISIONS NO.	DATE			MANHOLE CHIMNEY SEAL	DRAWING SS-35 PAGE 64a

The Town of Leesburg in Virginia — DESIGN AND CONSTRUCTION STANDARD

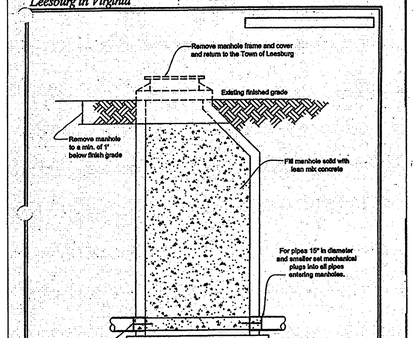

Not To Scale

REVISIONS NO.	DATE			SANITARY SEWER MANHOLE ABANDONMENT	DRAWING SS-32 PAGE 62

The Town of Leesburg in Virginia — DESIGN AND CONSTRUCTION STANDARD

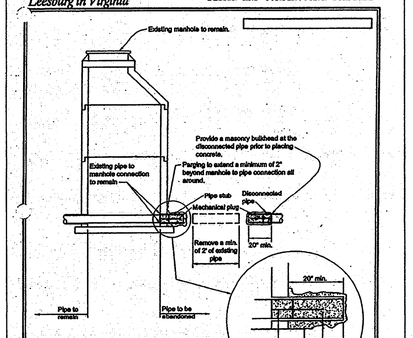

Not To Scale

REVISIONS NO.	DATE			SANITARY SEWER PIPE ABANDONMENT AT A MANHOLE	DRAWING SS-31 PAGE 61

The Town of Leesburg in Virginia — DESIGN AND CONSTRUCTION STANDARD

ARTICLE 4-130.5P

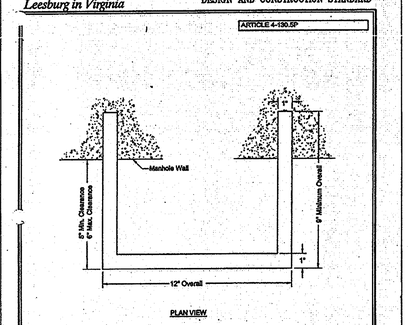

NOTES:

A. Steps must be steel with plastic or rubber coating unless otherwise specified for caustic service.

B. Steps may be M.A. Industries, Inc. "Plastic Step" or approved equal.

Not To Scale

REVISIONS NO.	DATE			MANHOLE STEP DETAIL	DRAWING SS-11 PAGE 41

The Town of Leesburg in Virginia — DESIGN AND CONSTRUCTION STANDARD

ARTICLE 4-130.8M

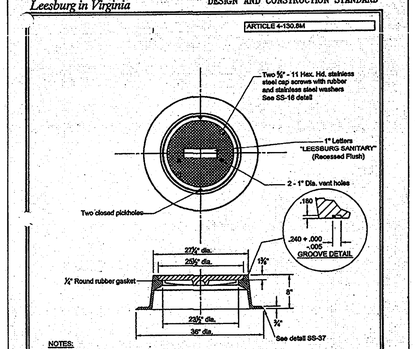

NOTES:

A. Heavy duty machine bearing surfaces.

B. Unit weight equals approximately 350 lbs.

C. Material shall conform to A.S.T.M. A48.

D. Frame must be fastened to the cone section.

Not To Scale

REVISIONS NO.	DATE			HEAVY DUTY AND LOCK TYPE MANHOLE FRAME AND COVER	DRAWING SS-16 PAGE 46

The Town of Leesburg In Virginia — DESIGN AND CONSTRUCTION STANDARD

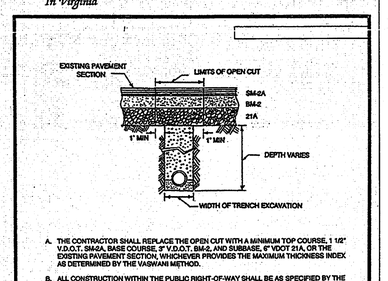

A. THE CONTRACTOR SHALL REPLACE THE OPEN CUT WITH A MINIMUM TOP COURSE, 1 1/2" V.D.O.T. SM-2A, BASE COURSE, 3" V.D.O.T. SM-2, AND SUBBASE, 6" VDOT 21A, OR THE EXISTING PAVEMENT SECTION, WHICHEVER PROVIDES THE MAXIMUM THICKNESS INDEX AS DETERMINED BY THE VASWANI METHOD.

B. ALL CONSTRUCTION WITHIN THE PUBLIC RIGHT-OF-WAY SHALL BE AS SPECIFIED BY THE DIRECTOR.

C. ALL EXPOSED EDGES OF EXISTING BITUMINOUS SURFACE COURSE SHALL BE PRIMED WITH A MATERIAL SATISFACTORY TO THE DIRECTOR BEFORE THE BITUMINOUS MIXTURES ARE REPLACED.

D. THE BACKFILL IN THE TRENCH SHALL BE SUITABLE AS DEFINED IN ARTICLE 9, AND SHALL BE THOROUGHLY COMPACTED IN 6-INCH LAYERS BY TAMPING OR BY OTHER APPROVED METHOD BEFORE THE OPENING IS PAVED. NO EXCAVATIONS OR CAVE-INS UNDER THE EXISTING PAVEMENT WILL BE PERMITTED, AND NO DELLYING OF THE TRENCHES WILL BE PERMITTED. SHEETING OR SHORING SHALL BE USED WHEN REQUIRED BY THE DEPTH OF THE TRENCH OR TYPE OF MATERIAL IN ACCORDANCE WITH VIRGINIA O.S.H.A. STANDARDS.

NOT TO SCALE

REVISIONS NO.	DATE			PAVEMENT PATCH	DRAWING TS-23 PAGE 98

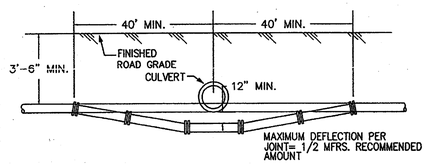

WATER MAIN LOWERING DETAIL

(BY ALLOWABLE JOINT DEFLECTION)

NO SCALE

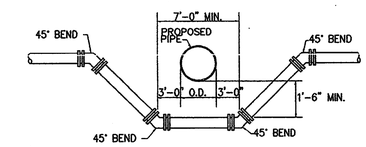

TYPICAL METHOD of ADJUSTING WATER LINES

NO SCALE

The Town of Leesburg in Virginia — DESIGN AND CONSTRUCTION STANDARD

ARTICLE 4-130.8M

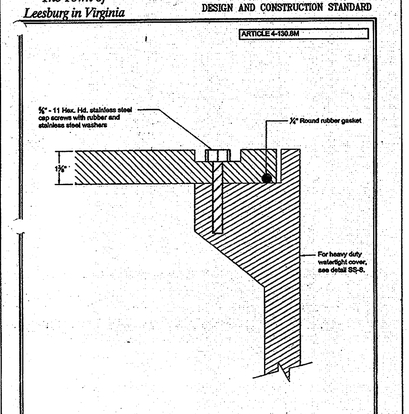

Not To Scale

REVISIONS NO.	DATE			MANHOLE LOCKING COVER	DRAWING SS-10 PAGE 46

The Town of Leesburg in Virginia — DESIGN AND CONSTRUCTION STANDARD

ARTICLE 4-130.8J

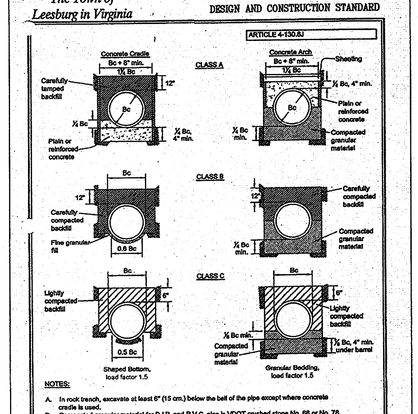

NOTES:

A. In rock trench, excavate at least 6" (15 cm.) below the bell of the pipe except where concrete cradle is used.

B. Compacted granular material for D.I.P. and P.V.C. pipe is VDOT crushed stone No. 68 or No. 78.

Not To Scale

REVISIONS NO.	DATE			CONDUIT BEDDING SEWER LINES	DRAWING SD-5 PAGE 41

The Town of Leesburg in Virginia — DESIGN AND CONSTRUCTION STANDARD

ARTICLE 4-130.8H

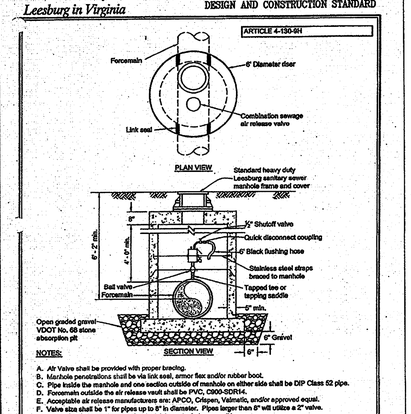

NOTES:

A. Air Valve shall be provided with proper bracing.
B. Manhole penetrations shall be via link seal, armor flex and/or rubber boot.
C. Pipe inside the manhole and one section outside of manhole on either side shall be DIP Class 52 pipe.
D. Forcemain outside the air release vault shall be PVC, C900-SDR14.
E. Acceptable air release manufacturers are: APCO, Crispen, Valmatic, and/or approved equal.
F. Valve size shall be 1" for pipes up to 8" in diameter. Pipes larger than 8" will utilize a 2" valve.
G. Saddle must be epoxy coated with stainless steel straps or all brass.

Not To Scale

REVISIONS NO.	DATE			FORCEMAIN SEWAGE AIR RELEASE VALVE	DRAWING SD-6 PAGE 55

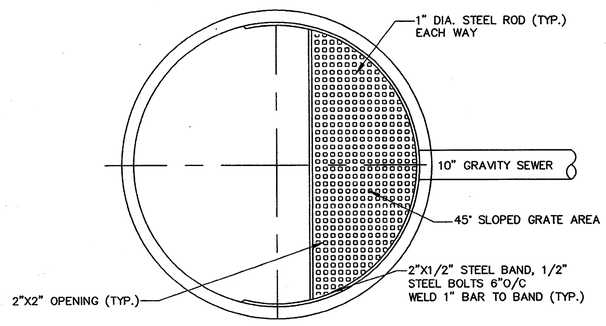

TOP VIEW

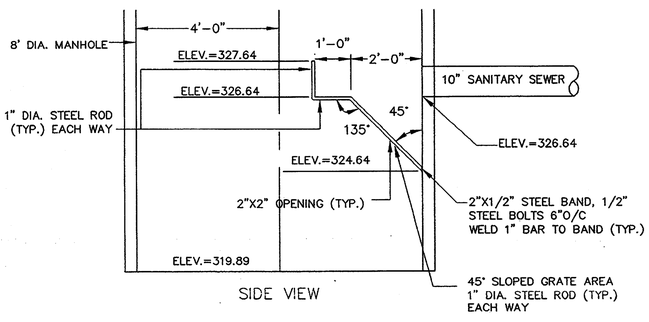

SIDE VIEW

TRASH BASKET DETAIL

NOT SCALE

BID

COMMONWEALTH OF VIRGINIA — FRED R. WILLIAMS — No. 032037 — 11/29/04 — PROFESSIONAL ENGINEER

VIRGINIA | NORTH CAROLINA | WEST VIRGINIA

THIS DRAWING PREPARED AT THE CORPORATE OFFICE
711 N. Courthouse Road | Richmond, VA 23236-4099
TEL 804.794.3500 FAX 804.794.7639 www.timmons.com

YOUR VISION ACHIEVED THROUGH OURS.

Site Development | Residential | Infrastructure | Technology

REVISION DESCRIPTION	DATE
	11/29/04

DRAWN BY: O. YERMOLAYEV
DESIGNED BY: O. YERMOLAYEV
CHECKED BY: A. WILLIAMS
SCALE: AS SHOWN

TIMMONS GROUP

LOUDOUN DGS PUMP STATION
LOUDOUN COUNTY, VA
DETAIL SHEET

JOB NO. 21831-201
SHEET NO. 4

These plans and associated documents are the exclusive property of TIMMONS GROUP and may not be reproduced in whole or in part and shall not be used for

\200 - Municipal\21831\dwg\details.dwg, 12/01/2004 08:15:53 AM