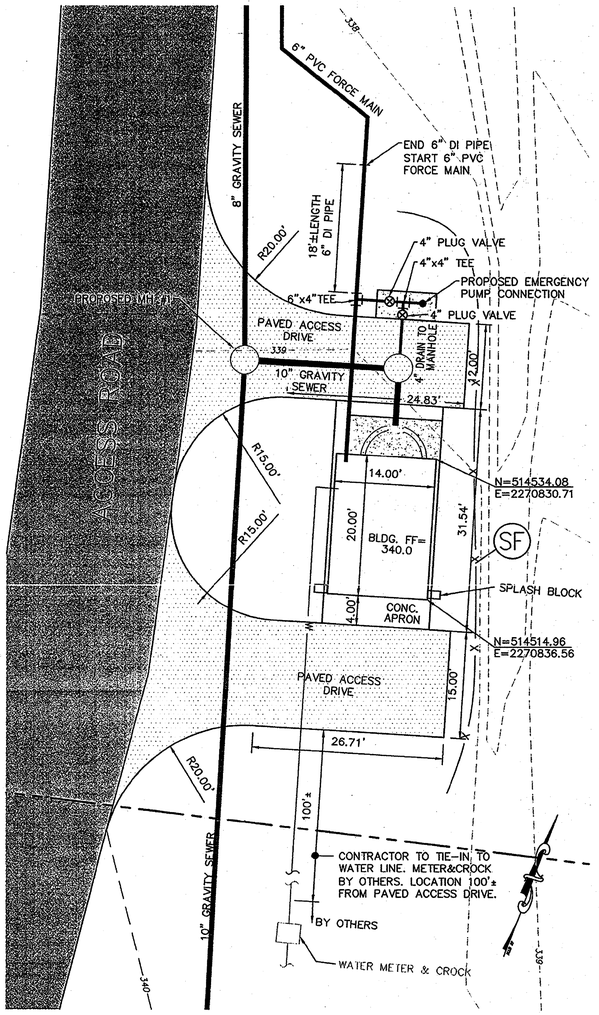

PUMP STATION SITE PLAN

SCALE: 1:10

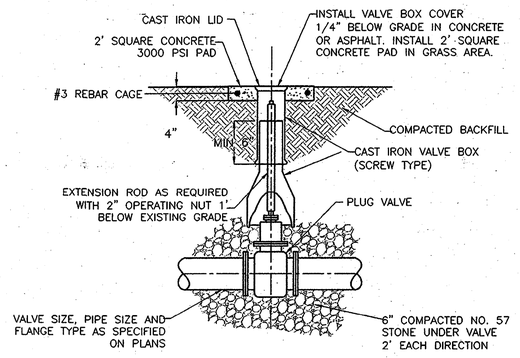

BURIED PLUG VALVE DETAIL | C137 | TG-0803

NOT TO SCALE

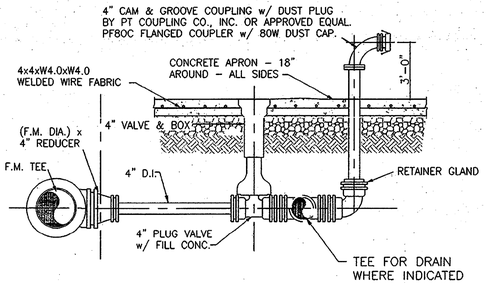

EMERGENCY PUMP CONNECTION

NOT TO SCALE

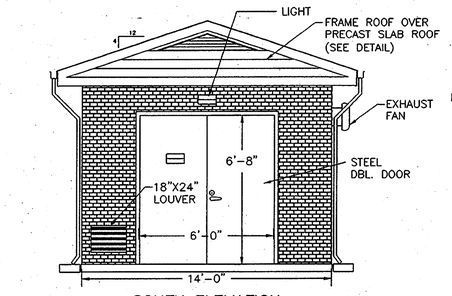

SOUTH ELEVATION

SCALE: 1/4"=1'-0"

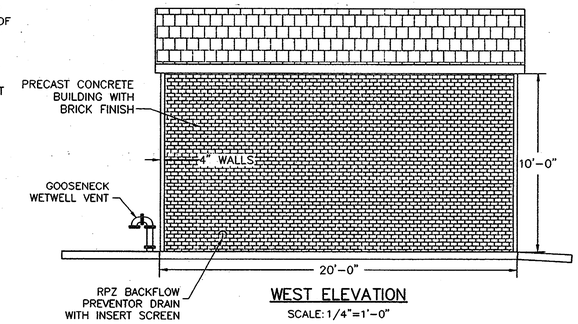

WEST ELEVATION

SCALE: 1/4"=1'-0"

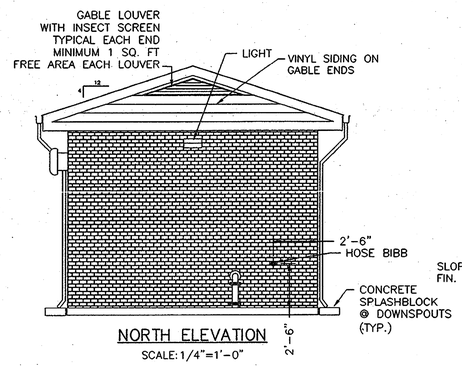

NORTH ELEVATION

SCALE: 1/4"=1'-0"

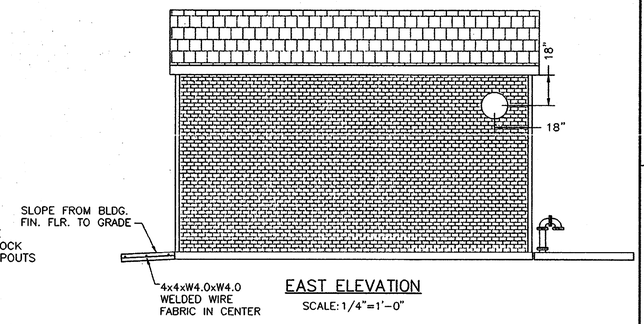

EAST ELEVATION

SCALE: 1/4"=1'-0"

PUMP STATION BUILDING ELEVATIONS

SCALE AS NOTED

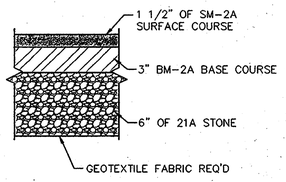

PAVED ACCESS DRIVE DETAIL

NOT TO SCALE

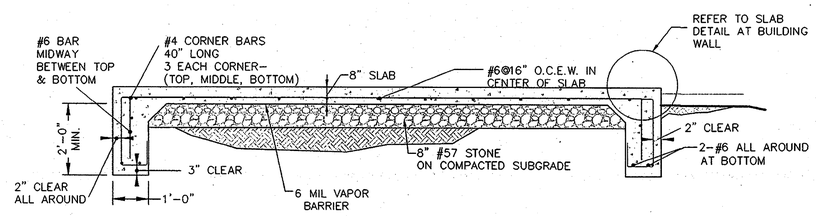

PUMP STATION BUILDING SLAB

NOT TO SCALE

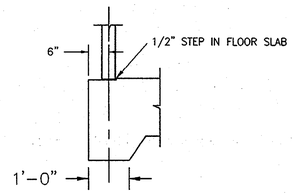

SLAB DETAIL AT BUILDING WALL

NOT TO SCALE

NOTE: THIS DETAIL TYPICAL ALL AROUND BLDG.

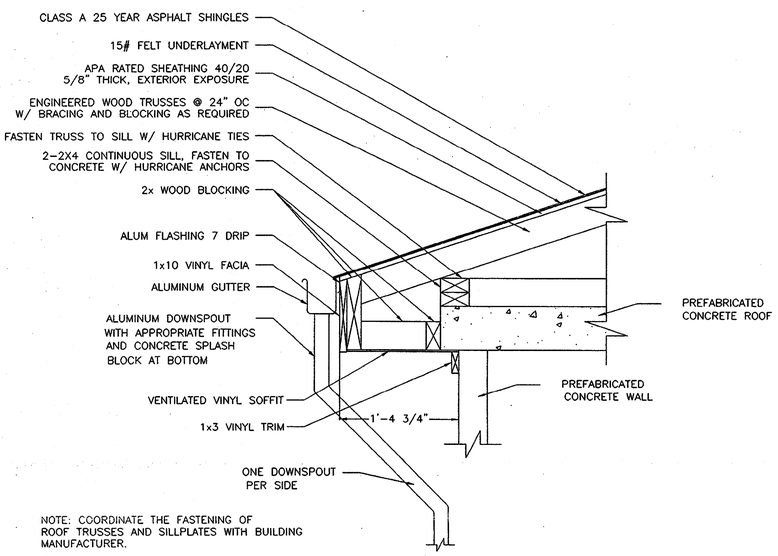

NOTE: COORDINATE THE FASTENING OF ROOF TRUSSES AND SILLPLATES WITH BUILDING MANUFACTURER.

PUMP STATION BUILDING ROOF DETAILS

NO SCALE

BID

COMMONWEALTH OF VIRGINIA
ALFRED R. WILLIAMS
No. 032037
11/29/04
PROFESSIONAL ENGINEER

VIRGINIA | NORTH CAROLINA | WEST VIRGINIA
THIS DRAWING PREPARED AT THE
CORPORATE OFFICE
711 N. Courthouse Road | Richmond, VA 23236-4099
TEL 804.794.3500 FAX 804.794.7639 www.timmons.com

YOUR VISION ACHIEVED THROUGH OURS.

Site Development | Residential | Infrastructure | Technology

REVISION DESCRIPTION	DATE

DATE	11/29/04
DRAWN BY	O.YERMOLAYEV
DESIGNED BY	O.YERMOLAYEV
CHECKED BY	A. WILLIAMS
SCALE	AS SHOWN

TIMMONS GROUP

LOUDOUN DGS PUMP STATION

LOUDOUN COUNTY, VA

PUMP STATION SITE & BUILDING DETAILS

JOB NO. 21831-201

SHEET NO. 5

These plans, and specifications are the property of TIMMONS GROUP and may not be reproduced in whole or in part and shall not be used for

I:\200 - Municipal\21831\dwg\2'83"PS-1.dwg, 12/02/2004 07:47:58 AM