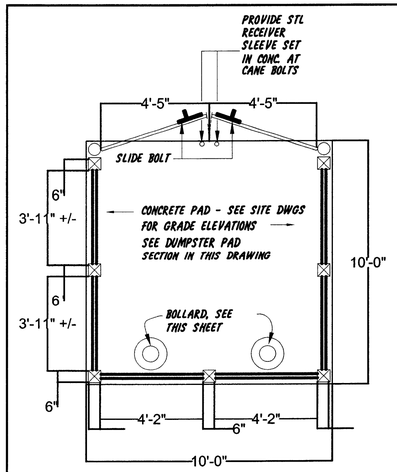

TRASH ENCLOSURE PLAN

NTS

G.C. NOTE VERIFY DIMENSIONS of DUMPSTER, CLEARANCE REQUIREMENTS AS CONFIRMED BY DISPOSAL SERVICE REP & APPROVED BY OWNER SEE SITE DWGS FOR LOCATION.

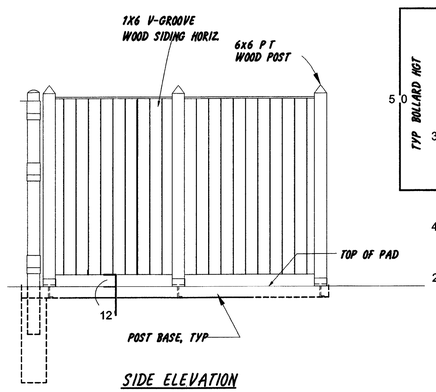

SIDE ELEVATION

NTS

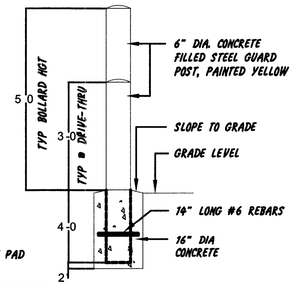

BOLLARD DETAIL

NTS

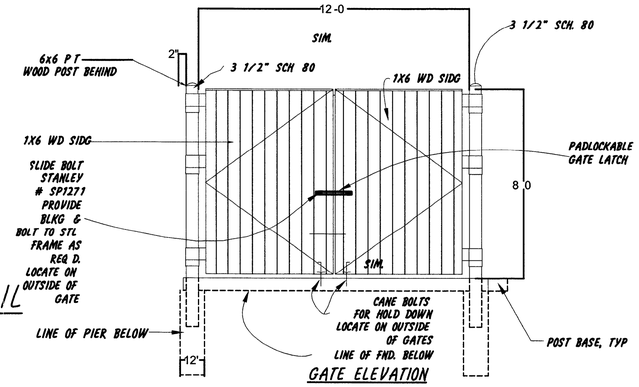

GATE ELEVATION

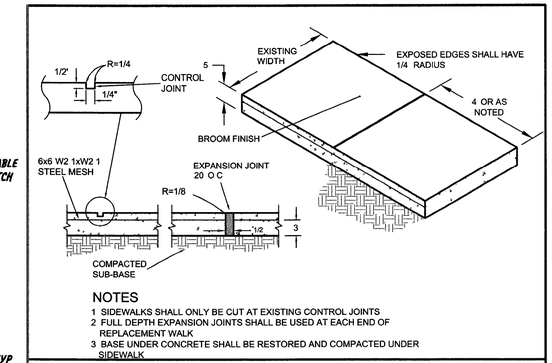

NOTES

1 SIDEWALKS SHALL ONLY BE CUT AT EXISTING CONTROL JOINTS
2 FULL DEPTH EXPANSION JOINTS SHALL BE USED AT EACH END OF REPLACEMENT WALK
3 BASE UNDER CONCRETE SHALL BE RESTORED AND COMPACTED UNDER SIDEWALK

SIDEWALK DETAIL

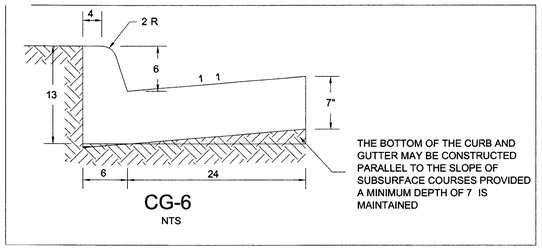

CG-6

NTS

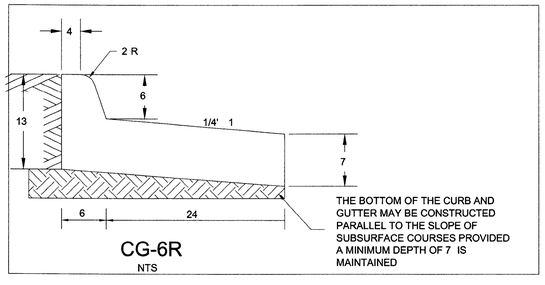

CG-6R

NTS

ENTRANCE DETAIL

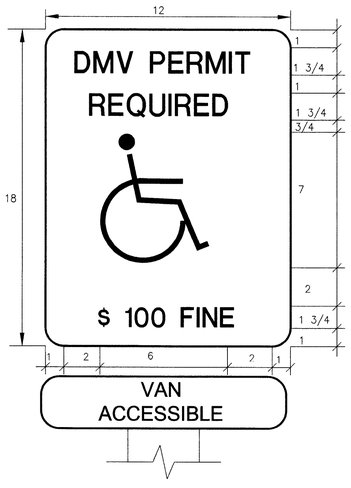

HANDICAP PARKING SPACE SIGN

(NOT TO SCALE)

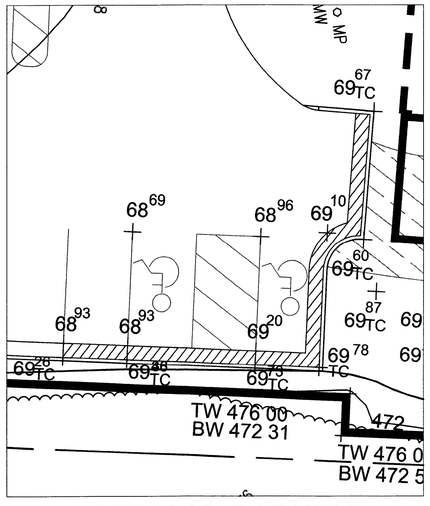

HANDICAP PARKING SPACE GRADING DETAIL

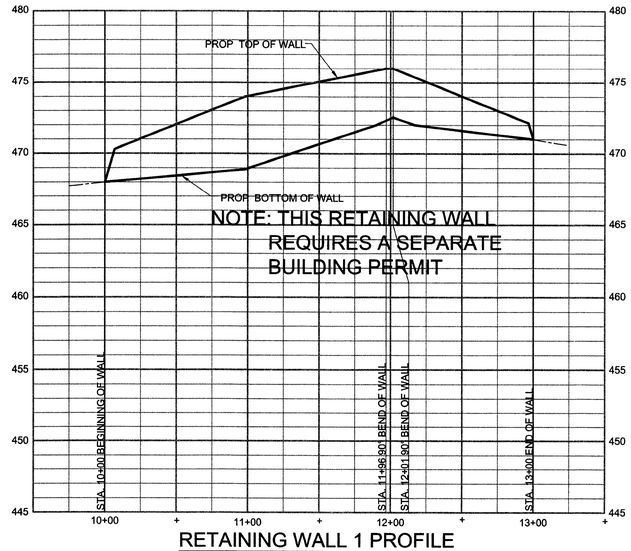

RETAINING WALL 1 PROFILE

STA 10+00 - 13+83
HORZ 1" = 50'
VERT 1" = 5'

AASHTO Pavement Design

Project Name	Middleburg Volunteer Fire Department			
Road Name and Location	910 W Washington St Middleburg Va 20117			
Full Road ADT =	- VPD			
Direction Factor =	0 74			
Passenger	85 %	or	0	VPD
Bus	0 %	or	0	VPD
2 Axle Truck	0 %	or	0	VPD
3 Axle Truck	0 %	or	0	VPD
1 Trailer Truck	15 %	or	0	VPD
2 Trailer Truck	0 %	or	0	VPD

Note 1 The ADT's Direction Factor and percentages of vehicular breakdown are from page 347 of the Annual Average Traffic Volume Estimates by Section of Route Primary and Interstate Routes attached

Growth Rate =	6 %
CBR =	4
Initial Pavement Design =	4 2
Terminal Pavement Design =	2 8

Note 2 Initial and Terminal Pavement Design values are taken from page 2 of the Guidelines for 1993 AASHTO Pavement Design by VDOT

Compute the Equivalent Single Axle Load (ESAL)

Vehicle Types	Current Traffic	Growth Factors	Design Traffic	ESAL Factors	Design ESAL
Passenger	101	1	36,855	0 0002	
Bus	0	0	0	0 37	0
2 Axle Truck	0	0	0	0 37	0
3 Axle Truck	0	0	0	0 37	0
1 Trailer Truck	18	0 5	3,285	1 28	4,205
2 Trailer Truck	0	0	0	1 28	5
All Vehicles	119		40,150		4,212

Note 3 The growth factor was taken from Table D 20 on page D 24 of the AASHTO Guide for the Design of Pavement Structures

Note 4 The ESAL Factors were taken from page 2 of the Guidelines for 1993 AASHTO Pavement Design by VDOT

Reliability =	90 %
Std Deviation =	0 49

Note 5 The reliability and standard deviation were taken from pages 2 and 3 of the Guidelines for 1993 AASHTO Pavement Design by VDOT

Design ESAL =	4,212
Resilient Modulus =	6000 KSI
ΔPSI =	1.4
SN =	**2 50**

Note 6 The structural number is from the nomograph on page II-32 of the AASHTO Guide for the Design of Pavement Structures attached

Layered Pavement Design

Surface Course	
Material	SM 9 5
Structural Coefficient =	0 44
Depth	2 in
SN for Layer =	0.88
Base Course	
Material	BM 25 0
Structural Coefficient =	0 40
Depth	2 in
SN for Layer =	0.80
Subbase	
Material	21A
Structural Coefficient =	0 12
Depth	8 in
SN for Layer =	0.96
Total SN =	**2.64**

Note 7 The structural coefficients were taken from page 3 of the Guidelines for 1993 AASHTO Pavement Design by VDOT

NORTH ENTRANCE GRAVEL ENTRANCE SECTION

4 #57 STONE
4 21A

DUMPSTER AND TRAINING PAD SECTION

NOT TO SCALE

8 REINFORCED CONCRETE
6 SUBBASE VDOT STD 21A
COMPACTED SUBGRADE (COMPACTED TO 95% DENSITY AT OPTIMUM MOISTURE CONTENT VDOT VTM-1 METHOD)

ONSITE TYPICAL PAVEMENT SECTION

NOT TO SCALE

2 00 SM-9 5 SURFACE COURSE
2 00 BM-25 BASE COURSE
8 SUBBASE VDOT STD 21A
COMPACTED SUBGRADE (COMPACTED TO 95% DENSITY AT OPTIMUM MOISTURE CONTENT VDOT VTM-1 METHOD)

PAVEMENT DESIGN BASED ON A SUBGRADE CBR DESIGN VALVE OF 4 SOIL TEST OF THE SUBGRADE MUST SUBMITTED FOR ACTUAL DETERMINATION OF REQUIRED PAVEMENT SECTION THICKNESS PRIOR TO CONSTRUCTION

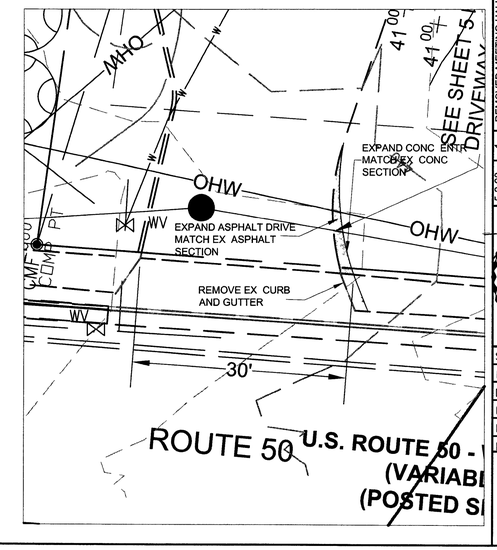

Bury+Partners
ENGINEERING SOLUTIONS
Consulting Engineers and Surveyors
3810 Concorde Parkway Suite 1000
Chantilly Virginia 20151
Tel 703/268-5000 Fax 703/968-4866
Bury+Partners-VA Inc ©Copyright 2007

MIDDLEBURG VOLUNTEER FIRE DEPARTMENT BUILDING ADDITION
FINAL SITE PLAN
BLUE RIDGE DISTRICT
TOWN OF MIDDLEBURG, VIRGINIA

Site Details

NO	DATE	REVISION
1	5.2.08	REMOVED MEETING HALL
2	7.10.08	REV 2ND REVIEW COMMENTS

COMMONWEALTH OF VIRGINIA
WILLIAM D HUME
No 0037880
7/9/08
PROFESSIONAL ENGINEER

SCALE	AS SHOWN
DATE	11-16-07
DRAWN BY	PJC/BP
DESIGNED BY	PJC
REVIEWED BY	MS
PROJ NO	220550002

SHEET 5 OF 18