ELECTRICAL ONE LINE DIAGRAM

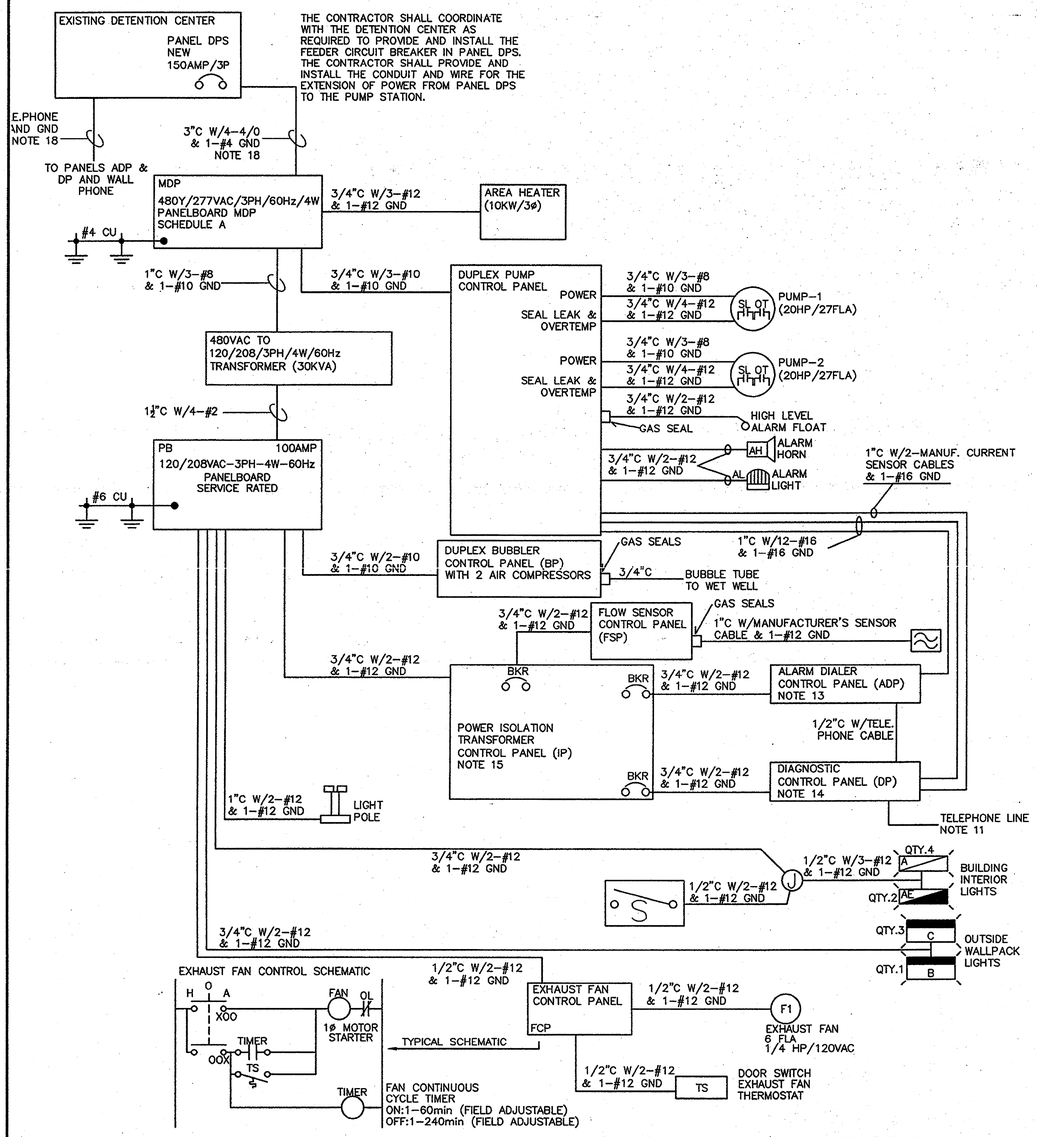

1. CONTRACTOR SHALL COORDINATE WITH THE DETENTION CENTER FOR THE EXTENSION OF POWER AND TELEPHONE CABLE BETWEEN THE DETENTION CENTER AND THE WASTE WATER PUMP STATION.
2. THE CONTRACTOR SHALL INSTALL BONDING BUSHINGS AND GROUNDING LOCKNUTS ON ALL PANEL AND CONDUIT CONNECTIONS. TWO GROUND RODS SHALL BE INSTALLED AT THE PUMP STATION AND ALL ENCLOSURES SHALL BE BONDED.
3. CONTRACTOR SHALL SUPPLY AND INSTALL THE FOLLOWING LIGHTNING/SURGE ARRESTORS PER THE MANUFACTURERS INSTALLATION INSTRUCTIONS AND RECOMMENDATIONS.
   a. PANEL MDP – DELTA LA AND CA SERIES OR APPROVED EQUAL
   b. PANEL PB – DELTA LA AND CA SERIES OR APPROVED EQUAL
   c. PANEL ADP & DP – CONSULT WITH THE LOCAL TELEPHONE COMPANY FOR PROPER PHONE LINE PROTECTION.
4. ALL ENCLOSURES INSTALLED UNDER THIS CONTRACT SHALL BE PAD LOCKABLE WITH COMMON KEYED LOCKING DEVICES.
5. ALL WIRE INSTALLED UNDER THIS CONTRACT SHALL BE COPPER.
6. ALL EQUIPMENT SHALL BE INSTALLED IN ACCORDANCE WITH LOCAL CODES AND REGULATIONS.
7. ALL EQUIPMENT SHALL BE PROVIDED WITH LAMICOID NAMEPLATES (3/16" LETTERING MIN.).
8. ALL EXTERIOR CONDUITS SHALL BE UNDERGROUND AND SHALL BE INSTALLED PER 1996 NEC TABLE 300-5 & TABLE 300-50 AND ARTICLE 300-6 (PROTECTION AGAINST CORROSION).
9. CONTRACTOR SHALL SUPPLY ALL EQUIPMENT REQUIRED TO PROVIDE FOR A COMPLETE OPERATING SYSTEM.
10. ALL COMPLETED ENCLOSURES SHALL BE UL LISTED.
11. NEMA-4X RATED ALARM DIALER WITH BATTERY BACKUP AND 16 DIGITAL ALARM INPUTS. THE ALARM DIALER SHALL BE RACO VERBATIM SERIES OR EQUAL.
12. SUPPLY AND INSTALL A STANDARD WALL MOUNT PUSHBUTTON TELEPHONE.
13. THE ALARM DIALER PANEL (ADP) SHALL MONITOR AND TRANSMIT THE FOLLOWING ALARMS:
    HIGH WET WELL, LOW WET WELL, PUMP-1 FAILURE, PUMP-2 FAILURE, POWER FAILURE. THE DIALER SHALL BE KAYE INSTRUMENTS OR EQUAL.
14. THE DIAGNOSTIC AND INFORMATION CONTROL PANEL (DP) SHALL BE MANUFACTURED BY ABB OR APPROVED EQUAL. THE UNIT SHALL BE IN A NEMA-4X ENCLOSURE AND EQUIPPED WITH THE MOST CURRENT SYSTEM UPGRADES.
15. SEPARATE GROUNDING OF THE DIALER, DIAGNOSTIC AND FLOW METER SYSTEMS (NOT TO BUILDING GROUND) AND LINE POWER ISOLATION TRANSFORMER (IP) COMPARABLE TO TOPAZ ULTRA ISOLATOR TO PROTECT THE CIRCUITS FROM VOLTAGE SWINGS ON THE GROUND AND LINE. PANEL IP SHALL ALSO INCLUDE DISTRIBUTION BREAKERS FOR LOADS SUPPLIED BY THIS PANEL.
16. NO GROUNDING TO THE WATERLINE IS ALLOWED.
17. IN ADDITION TO THE PUMP STATIONS SPECIFICATIONS, THE CONTRACTOR SHALL CONSULT WITH THE PUMP STATION MANUFACTURER TO ENSURE THAT THE PUMP STATION CONTROL PANEL INCLUDES THE FOLLOWING:
    a. INDICATOR LIGHT FOR EACH ALARM CONDITION AND POWER ON.
    b. HORN SILENCE PUSH BUTTON, ALARM TEST PUSH BUTTON AND ALARM RESET PUSHBUTTON.
    c. NEMA-4 DC VOLTAGE AUDIBLE ALARM HORN (110db min @10ft.) AND A NEMA-4 RED BEACON LIGHT WITH MCP DOOR MOUNTED HORN SILENCE PUSHBUTTON.
    d. BATTERY BACKUP WITH AUTOMATIC TRICKLE CHARGER AS REQUIRED TO OPERATE EXTERIOR ALARM HORN AND BEACON LIGHT FOR A PERIOD OF NOT LESS THAN FOUR HOURS.
    e. ALL ALARMS SHALL HAVE A SEAL-IN CIRCUIT SUCH THAT AN OPERATOR SHALL NEED TO PUSH THE RESET PUSHBUTTON AFTER VIEWING THE ALARM LIGHT INDICATORS TO ACKNOWLEDGE ALARMS.
    f. PROVIDE FORM-C CONTACTS FOR ALARM CONDITIONS WHICH SHALL INCLUDE BUT NOT BE LIMITED TO THE FOLLOWING:
       1. MOTOR STARTER OVERLOAD FOR PUMP-1 &/OR PUMP-2
       2. SEAL-LEAK FOR PUMP-1 &/OR PUMP-2 (IF AVAILABLE WITH PUMP SPECIFIED)
       3. MOTOR WINDING OVERTEMP FOR PUMP-1 &/OR PUMP-2 (IF AVAILABLE WITH PUMP SPECIFIED)
       4. CIRCUIT BREAKER TRIPPED FOR PUMP-1 &/OR PUMP-2
       5. HIGH WATER LEVEL BY PRESSURE SWITCH &/OR FLOAT
       6. 3-PHASE POWER MONITOR FAULT (OVER/UNDER,PHASE LOSS/IMBALANCE)
       7. BOTH PUMP SELECTOR SWITCHES INDICATE "NOT-IN-AUTO"
       8. FIELD ADJUSTABLE LEAD PUMP AND LAG PUMP START DELAY TIMERS TO PROVIDE STEP-LOAD STARTING.
       9. PUMP 1 CURRENT MONITOR SENSOR (HONEYWELL-MICROSWITCH CURRENT TRANSFORMER COMPATIBLE WITH PANEL DP.
       10. PUMP 2 CURRENT MONITOR SENSOR (HONEYWELL-MICROSWITCH CURRENT TRANSFORMER COMPATIBLE WITH PANEL DP.
    g. A 120VAC/1PH CIRCUIT BREAKER TO POWER THE AREA POLE MOUNTED LIGHT.
    h. CURRENT SENSING RELAY WITH SENSING TIME DELAY FOR EACH PUMP TO DETECT UNDERCURRENT WHILE IN OPERATION. THIS SHALL BE UTILIZED TO INDICATE PUMP STATION FAILURE TO DISCHARGE. PROVIDE PILOT LIGHT WITH SEAL-IN CIRCUIT TO INDICATE CONDITION.
18. THIS CONDUIT RUN IS APPROXIMATELY 600FT. THE ACTUAL DISTANCE SHALL BE FIELD VERIFIED BY THE CONTRACTOR. THE CONTRACTOR SHALL INSTALL PULL BOXES AS REQUIRED. CONDUITS SHALL BE ENCASED IN CONCRETE UTILIZING CHAIRS, REBAR AND TIE DOWNS SPACED AS REQUIRED BY NEC TO PROVIDE FOR A PROPER INSTALLATION AND TO NOT ALLOW THE CONDUITS TO FLOAT DURING THE POUR. THE TOP OF THE CONCRETE SHALL BE 24" BELOW GRADE WITH A METALLIC TRACING TAPE LOCATED 12" BELOW GRADE. CONCRETE ENCASED CONDUIT BELOW GRADE SHALL BE PVC SCHED-40. CONDUIT ABOVE GRADE SHALL BE GALVANIZED RIGID METAL CONDUIT.
19. ENCLOSURES MOUNTED INSIDE: NEMA-12 MINIMUM. ENCLOSURES MOUNTED OUTSIDE: NEMA-3R MINIMUM.

ELECTRICAL LEGEND

ALL SYMBOLS MAY NOT BE USED ON THIS CONTRACT

- EXIT LIGHT – NO. DENOTES FACES
- JUNCTION BOX
- OUTSIDE WALL PACK LIGHT
- FLUORESCENT LIGHT
- FLUORESCENT LIGHT W/EMERGENCY BALLAST AND BATTERY PACK
- EMERGENCY LIGHT
- PHOTOCELL
- +44" WALL MOUNTED TOGGLE SWITCH – HEIGHT A.F.F.
- WALL MOUNTED TOGGLE SWITCH – NO. INDICATES 3-WAY, ETC.
- RECEPTACLE
- CONDUIT RUN — — — IN CONCRETE SLAB
- INDICATES NO. OF WIRES (1-HOT,1-NEUTRAL & 1-GROUND)
- INDICATES A "HOMERUN" (3-HOTS & 1-GROUND)
- DISCONNECT SWITCH
- WALL MOUNTED TELEPHONE

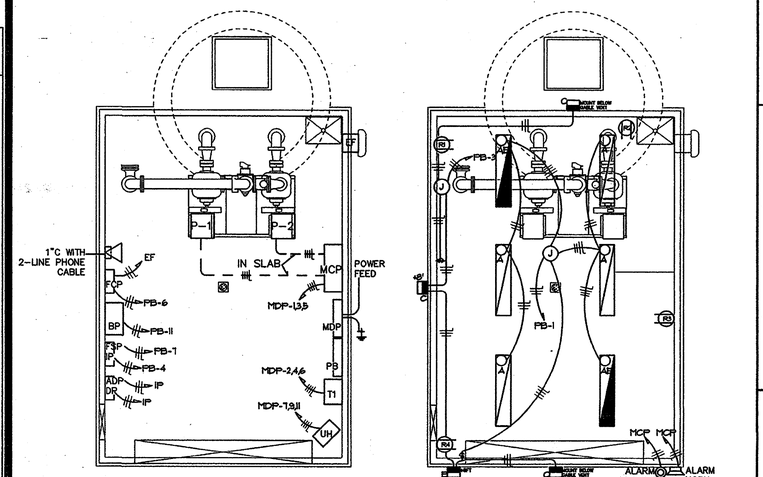

-POWER DISTRIBUTION PLAN- 1/4" = 1'

-LIGHTS/RECEPTACLES DISTRIBUTION PLAN 1/4" = 1'

PANELBOARD SCHEDULES

PANELBOARD: MDP
MOUNTING: SURFACE
ENCLOSURE: NEMA-12
BOLT-ON BREAKERS
MAIN BUSS: 200AMP, COPPER
VOLTAGE: 480Y/277VAC,3ø,4W,60Hz
INTERIOR: 150AMP MAIN BREAKER

LOAD DESCRIPTION	CB SIZE	WIRE AWG	# POLE	CKT NO	AMPS/PHASE #A	#B	#C	CKT NO	# POLE	WIRE AWG	CB SIZE	LOAD DESCRIPTION
DUPLEX PUMP CONTROL PANEL SUPPLY WITH BREAKER LOCKOUT DEVICE	80	3	3	1	61			2	3	8	50	TRANSFORMER, 30KVA 480-208Y/120VAC,3ø SUPPLY WITH BREAKER LOCKOUT DEVICE
				3	36			4				
				5		61		6				
						36						
							61	8				
							36					
AREA HEATER (10KW, 480VAC,3ø) SUPPLY WITH BREAKER LOCKOUT DEVICE	25	10	3	7	12			8	--	--	--	SPACE WITH PROVISIONS
				9	--	12		10	--	--	--	SPACE WITH PROVISIONS
				11		--	12	12	--	--	--	SPACE WITH PROVISIONS
							--					
SPACE WITH PROVISIONS	--	--	--	13	--			14	--	--	--	SPACE WITH PROVISIONS
					--							
SPACE WITH PROVISIONS	--	--	--	15		--		16	--	--	--	SPACE WITH PROVISIONS
						--						
SPACE WITH PROVISIONS	--	--	--	17			--	18	--	--	--	SPACE WITH PROVISIONS
							--					
SERVICE AMPS: 200AMPS					109	109	109	TOTAL AMPS				

FEEDERS: 4-4/0 & 1-#4GND
KAIC RATING: AS REQUIRED

PANELBOARD: PB, SERVICE RATED
MOUNTING: SURFACE
ENCLOSURE: NEMA-12
BOLT-ON BREAKERS
MAIN BUSS: 100AMP, COPPER
VOLTAGE: 120/208VAC,3ø,4W,60Hz
INTERIOR: MAIN CIRCUIT BREAKER, 100AMP

LOAD DESCRIPTION	CB SIZE	WIRE AWG	# POLE	CKT NO	AMPS/PHASE #A	#B	#C	CKT NO	# POLE	WIRE AWG	CB SIZE	LOAD DESCRIPTION
INSIDE LIGHTS	20	12	1	1	4			2	1	12	20	CHEMICAL FEED RECEPTACLE (R1)
					2							
OUTSIDE WALLPACK LIGHTS	20	12	1	3		3		4	1	12	25	2KVA POWER ISOLATION TRANSFORMER PANEL (IP)
						17						
LIGHT POLE	20	12	1	5			9	6	1	12	20	EXHAUST FAN CONTROL PANEL (FCP)
							5					
FLOW SENSOR CONTROL PANEL (FSP)	20	12	1	7	5			8	1	12	20	RECEPTACLES (R2,R3,R4)
					7							
SPARE BREAKER	20	--	1	9		--		10	1	--	20	SPARE BREAKER
						--						
DUPLEX BUBBLER CONTROL PANEL (BP)	20	12	1	11			10	12	--	--	--	SPACE WITH PROVISIONS
							--					
SPACE WITH PROVISIONS	--	--	--	13	--			14	--	--	--	SPACE WITH PROVISIONS
					--							
SPACE WITH PROVISIONS	--	--	--	15		--		16	--	--	--	SPACE WITH PROVISIONS
						--						
SPACE WITH PROVISIONS	--	--	--	17			--	18	--	--	--	SPACE WITH PROVISIONS
							--					
SERVICE AMPS: 100AMPS					18	20	24	TOTAL AMPS				

FEEDERS: #2
KAIC RATING: AS REQUIRED

LIGHTING FIXTURE SCHEDULE

FIXTURES SHALL BE AS NOTED OR APPROVED EQUAL

FIXTURES B & C MUST HAVE PHOTOCELLS WITH MANUAL/AUTOMATIC SELECTOR SWITCH

TYPE	QTY	MANUF.	CAT. NUMBER	LAMPS NO.	WATTS	TYPE	VOLTS
A	6	LITHONIA	DMW-2-40-AR-120-ES-STSL	2	40	T12	120VAC
AE	2	LITHONIA	DMW-2-40-AR-120-ES-EL-STSL	2	40	T12	120VAC
B	1	LITHONIA	TWAC-42TRT-120-LP1	1	42	INC	120VAC
C	1	HUBBELL	PGS-A100H-128-1-PVLV-PGWG-(PBT-1)	1	100	HPF	120VAC
D	1	LITHONIA	LIGHT: KSF2-400M-R4SC-120-SF-SP09-PER-SCWA (2-LIGHT FIXTURES) POLE: SSS-20-5G-DM28-DDB-BC-SBC5-HHC	2	400	MH	120VAC

BID

COMMONWEALTH OF VIRGINIA
D. L. GLASSCOCK
No. 36309
PROFESSIONAL ENGINEER

VIRGINIA | NORTH CAROLINA | WEST VIRGINIA
THIS DRAWING PREPARED AT THE
TIMMONS GROUP OFFICE
711 N. Courthouse Road | Richmond, VA 23236-4099
TEL 804.794.3500 FAX 804.794.7639 www.timmons.com

YOUR VISION ACHIEVED THROUGH OURS.

Site Development | Residential | Infrastructure | Technology

REVISION DESCRIPTION	DATE

DATE	11/29/04
DRAWN BY	DLG
DESIGNED BY	DLG
CHECKED BY	DLG
SCALE	AS SHOWN

TIMMONS GROUP

LOUDOUN DGS PUMP STATION
LOUDOUN COUNTY, VA

ELECTRICAL ONE-LINE DIAGRAMS AND NOTES

JOB NO. 21831-201

SHEET NO. 7

These plans and associated documents are the exclusive property of TIMMONS GROUP and may not be reproduced in whole or in part and shall not be used for any purpose whatsoever, inclusive, but not limited to construction, bidding, and/or construction staking without the express written consent of TIMMONS GROUP.