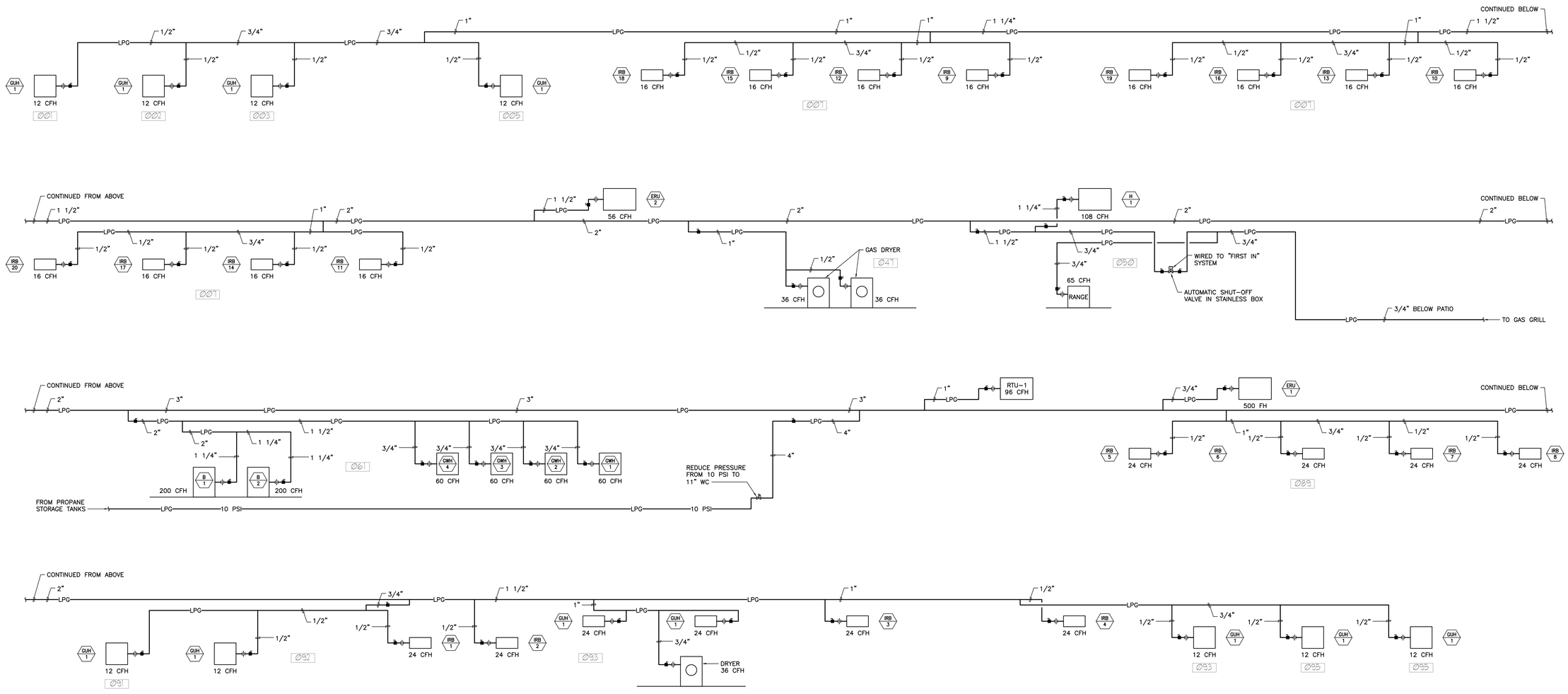

LPG (GAS) SCHEMATIC

NO SCALE

BID SET

HUGHES GROUP ARCHITECTS
22630 DAVIS DRIVE, SUITE 175
STERLING, VIRGINIA 20164
703.437.6600

CIVIL:
ALPHA CORPORATION
21351 Ridgetop Circle, Suite 200
Sterling, VA 20166
(703) 450-0800

STRUCTURAL:
EHLERT-BRYAN
1451 Dolley Madison Blvd. Suite 220
Mclean, VA 22101
(703) 827-9552

MECHANICAL/ELECTRICAL:
BRINJAC ENGINEERING
4000 Albermarle Street, NW
Washington, DC 20016
(202) 237-2750

PURCELLVILLE FIRE AND RESCUE

500 MAPLE AVE. BUILDING #
PURCELLVILLE, VIRGINIA

RISERS - PLUMBING

KEY PLAN

REVISIONS:

ISSUES:
9-26-07 BID SET

STAMP AND SEAL:

DATE: 09-26-07
SCALE: AS NOTED
PROJECT NO. 0611
SHEET: P-501

HOY, ANDREW 9/26/2007 2:57 PM O:\06\06230\DRAWINGS\MEP\P-501-06230.DWG

Copyright © 2007 by Hughes Group Architects