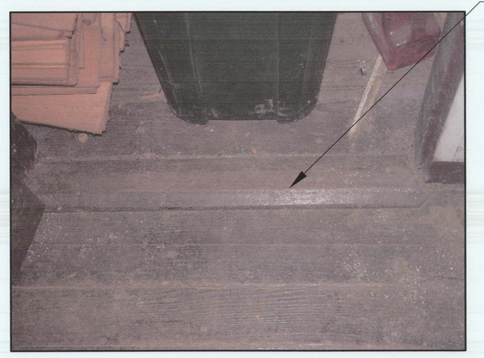

COST

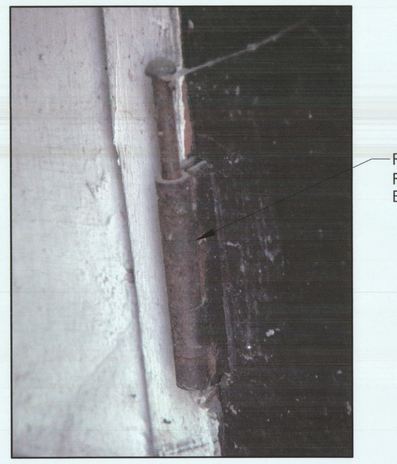

CLEAN & RE-PAINT FINISH TO PRECISELY MATCH EXIST. GRAIN PAINTED FINISH.

1 A-6 DOOR D5 DETAILS
NO SCALE

CLEAN & RE-PAINT FINISH TO PRECISELY MATCH EXIST. GRAIN PAINTED FINISH.

2 A-6 DOOR D6 DETAILS
NO SCALE

COST

CLEAN & RE-PAINT FINISH TO PRECISELY MATCH EXIST. GRAIN PAINTED FINISH.

3 A-6 DOOR D7 DETAILS
NO SCALE

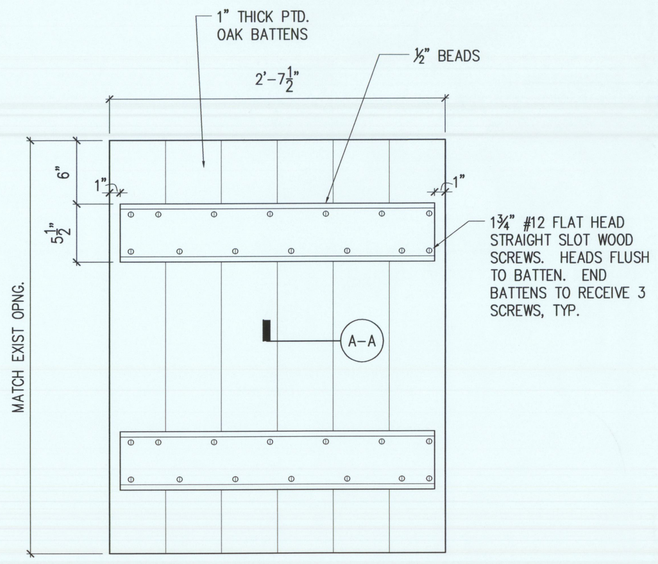

PLAN
1 1/2"=1'-0"

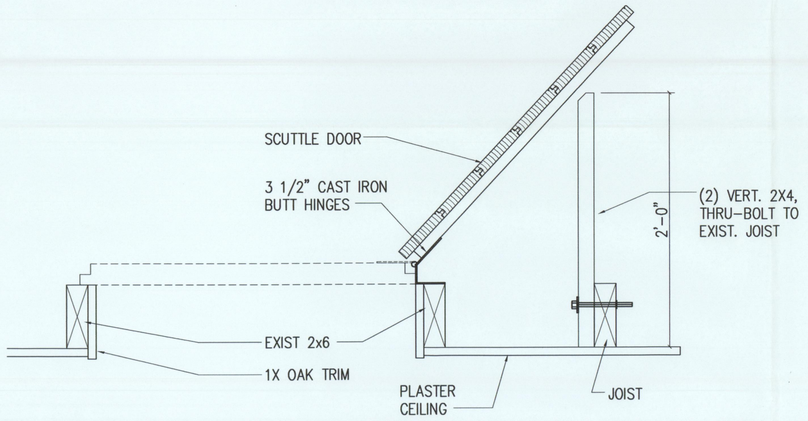

SECTION
1 1/2"=1'-0"

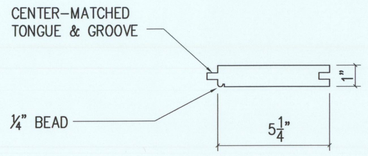

A-A DETAIL A-A
3"=1'-0"

4 A-6 DOOR D8 DETAILS: CEILING SCUTTLE
VARIES

COMMONWEALTH OF VIRGINIA
SEMON S. SAMAHA
(LICENSE) No. 3941
ARCHITECT

9990 Lee Highway Suite 350 Fairfax, VA 22030
Phone 703-691-3311 Fax 703-691-3316

Douglass C. Reed
Historic Structures Consultants
P.O. Box 185
Smithsburg, MD 21783
1-301-730-2699
douglasscreed@myactv.net

Mount ZION Church
Restoration

Loudoun County Department of Parks, Recreation, and Community Services

Virginia State project # 0000

Sheet Title:

DOOR DETAILS

Drawing Number. – Of

A–6

Issue Date: 4/24/05

Drawn By: TRS
Checked By: RAM
Project Number: 1184000