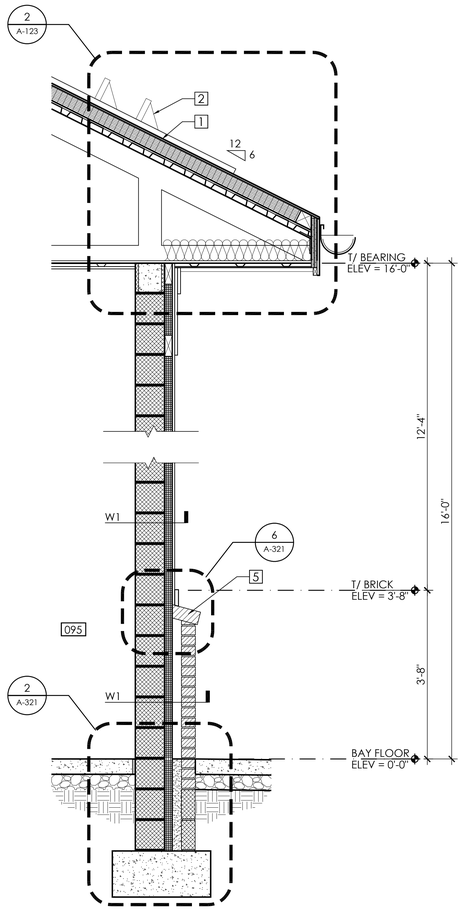

6 A-312 WALL SECTION
3/4" = 1'-0"

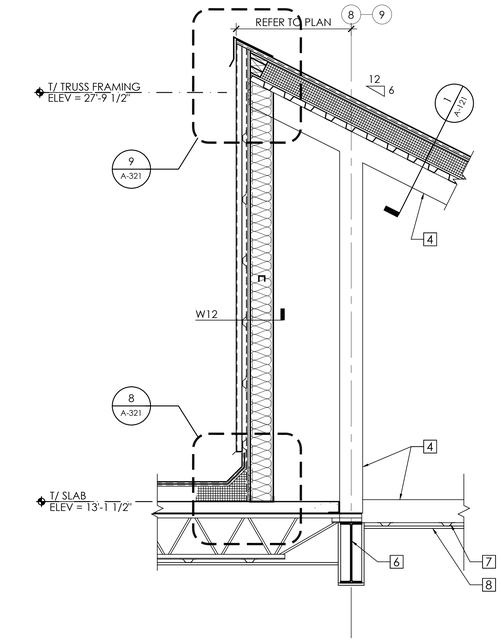

5 A-312 MECHANICAL ROOF WELL WALL
3/4" = 1'-0"

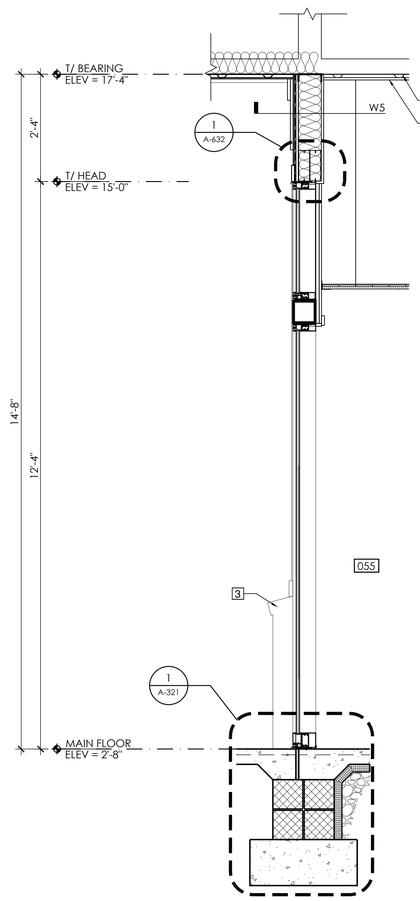

1 A-312 WALL SECTION
3/4" = 1'-0"

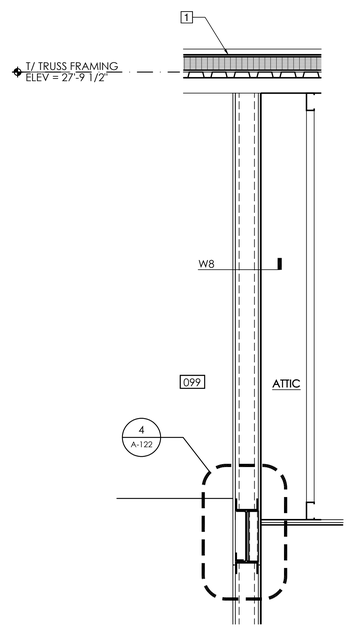

2 A-312 WALL SECTION
3/4" = 1'-0"

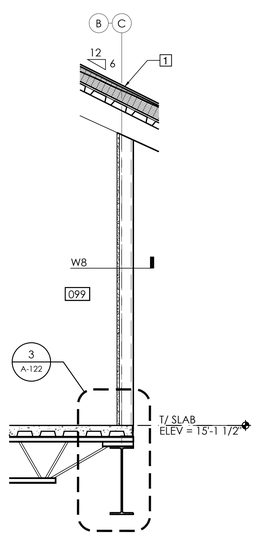

3 A-312 WALL SECTION
3/4" = 1'-0"

4 A-312 NOT USED
NONE

NOTES THIS DRAWING:

1. TYPICAL STANDING SEAM METAL ROOF CONSTRUCTION - REFER TO DETAIL 1/A-121
2. SNOW GUARDS
3. BRICK VENEER BEYOND
4. LG METAL ROOF TRUSS
5. ROWLOCK SILL
6. W16 - REFER TO STRUCTURAL
7. 7/8" RESILIENT CHANNEL AT 12" OC - REFER TO DRAWING G-013
8. 5/8" FR GYPSUM BOARD

HUGHES GROUP ARCHITECTS
22630 DAVIS DRIVE, SUITE 175
STERLING, VIRGINIA 20164
703.437.6600

CIVIL:
ALPHA ENGINEERING
21351 Ridgetop Circle, Suite 200
Sterling, VA 20166
(703) 450-0800

STRUCTURAL:
EHLERT-BRYAN
1451 Dolley Madison Blvd. Suite 220
McLean, VA 22101
(703) 827-9552

MECHANICAL/ELECTRICAL:
BRINJAC ENGINEERING
4000 Albermarle Street, NW, Suite 305
Washington, DC 20016
(202) 237-2750

PURCELLVILLE FIRE AND RESCUE

500 MAPLE AVE. BUILDING
PURCELLVILLE, VIRGINIA

WALL SECTIONS

KEY PLAN

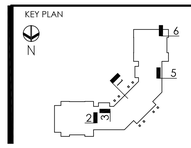

REVISIONS:

ISSUES:
9-26-07 BID SET

STAMP AND SEAL:

DATE: 9-26-07
SCALE: 3/4" = 1'-0"
PROJECT NO. 0611
SHEET: A-312

Copyright © 2007 by Hughes Group Architects