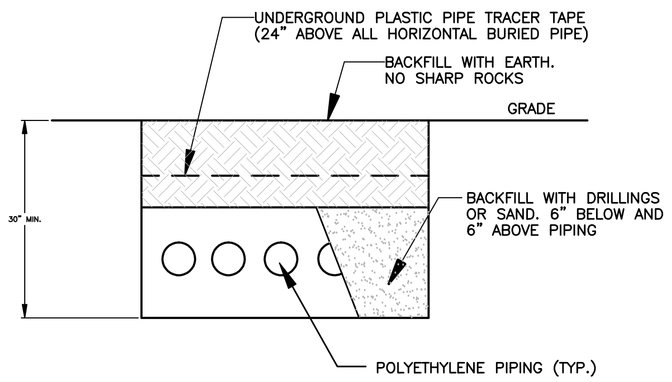

GEOTHERMAL TRENCH DETAIL

N.T.S.

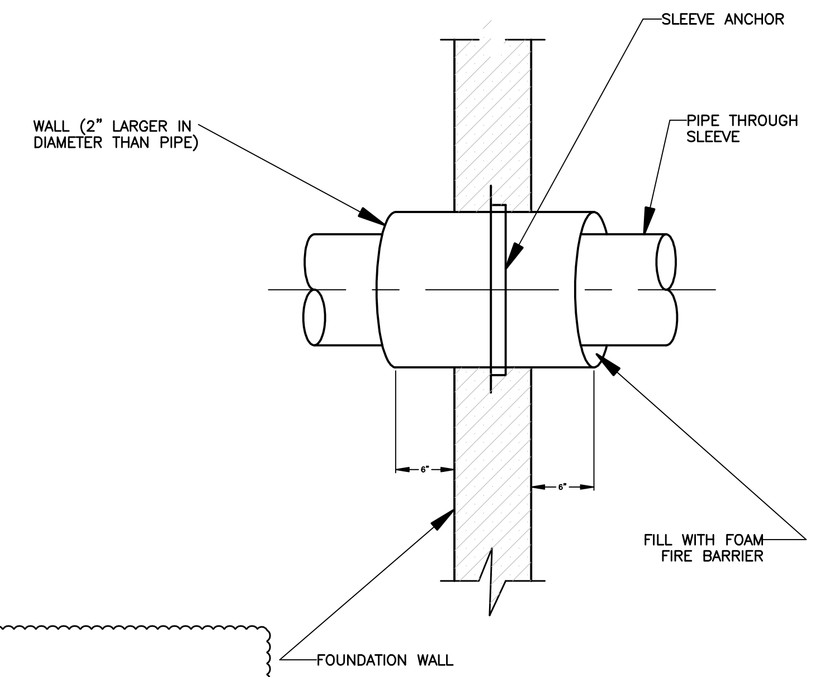

PIPE PENETRATION DETAIL

N.T.S.

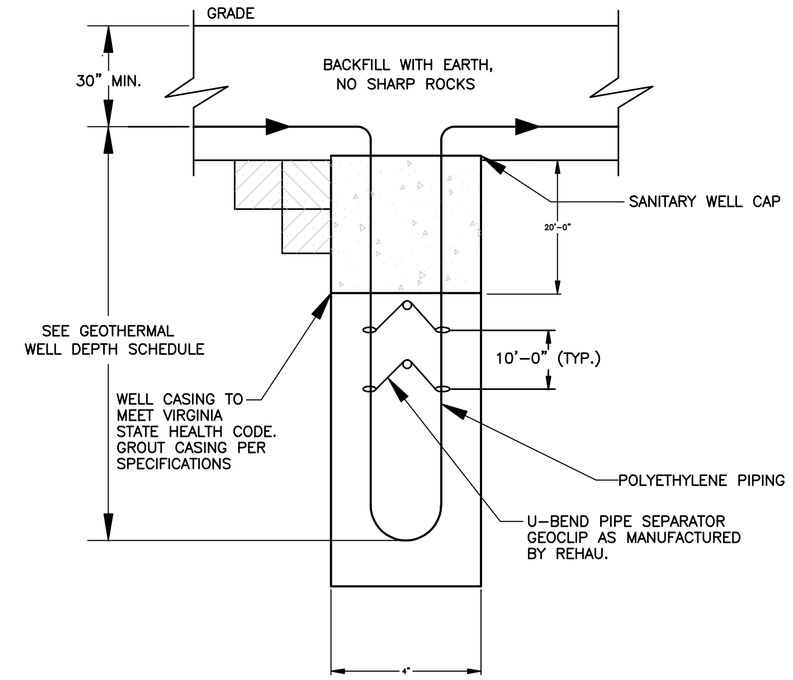

GEOTHERMAL WELL DETAIL

N.T.S.

GEOTHERMAL INFORMATION	
GEOTHERMAL WELL INFORMATION	
NUMBER OF WELLS	36
WELL DEPTH (FEET)	160
NUMBER OF WELL FIELDS	6
NUMBER OF WELLS PER FIELD	6
GEOTHERMAL PIPE SIZE	
WELL SIZE (IN.)	3/4
BRANCH SIZES (IN.)	SEE PLAN
S & R BRANCH MAIN SIZE (IN.)	1½"
MANIFOLD SIZE (IN.)	3
GEOTHERMAL PIPE MATERIAL	
WELL PIPE	PEXa BY REHAU
BRANCH PIPE	PEXa BY REHAU
S & R MAIN PIPE	PEXa BY REHAU
MANIFOLD PIPE	PEXa BY REHAU
GEOTHERMAL VAULT INFORMATION	
ATLANTIS VAULT W=5' L=5' H=6'	BY GEOTHERMAL SUPPLY COMPANY
FLUID INFORMATION	
FLUID	WATER
FLOW PER WELL FIELD (GPM)	12.6
FLOW PER WELL (GPM)	2.1
MAXIMUM ENTERING WATER TEMP.	95° F.
MINIMUM ENTERING WATER TEMP.	43° F.

NOTES

1. GEOTHERMAL LINES RUN HORIZONTAL SHALL BE 48" BELOW FINISHED GRADE PER MANUFACTURES INSTALLATION DIRECTIONS.
2. SHORTEN VAULT MANHOLE SUCH THAT TOP OF MANHOLE COVER IS 12" BELOW GRADE.

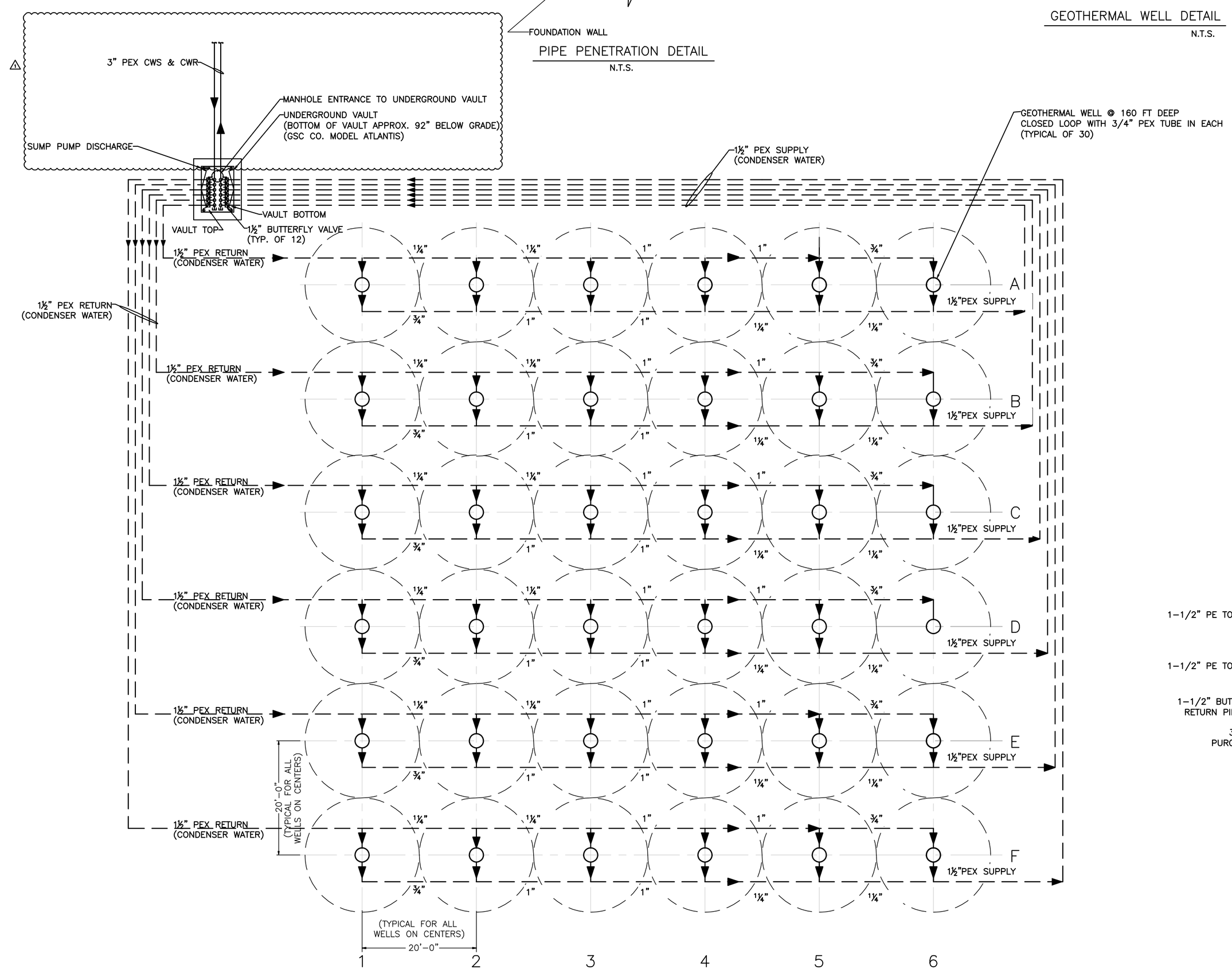

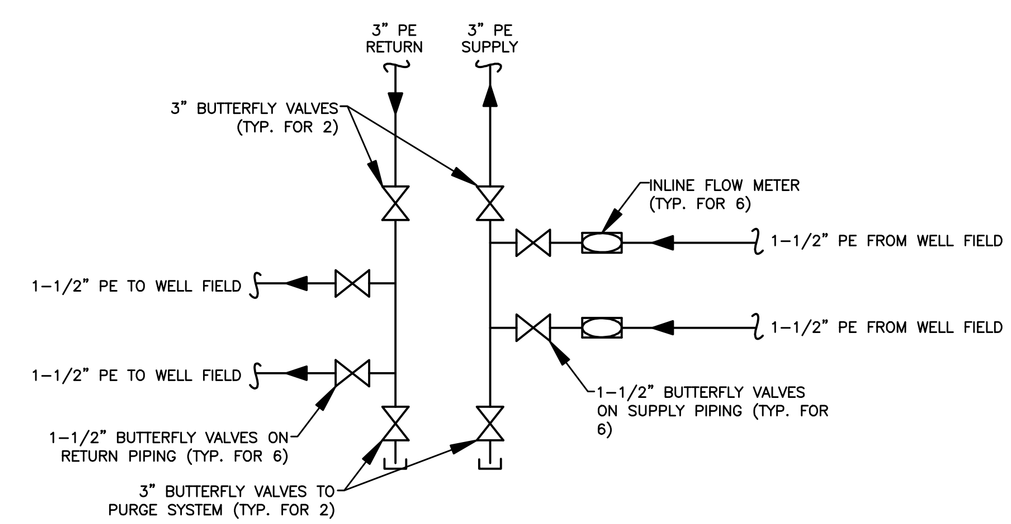

GEOTHERMAL HEADER DETAIL

N.T.S.

ARCHITECT

bh+a

Bergmann Hendrie + Archetype, In
300 A Street
Boston, MA 02210
617 350-0450 Tel
617 350-0215 Fax
www.bhplus.com

PROJECT NAME

Lucketts Community Center

42361 Lucketts Road
Lucketts, Virginia

CLIENT

Loudoun County, Virginia Department of Construction and Waste Management

211 Gibson St NW
Lucketts, VA 20176
(703) 737-8998 tel
(703) 771-5097 fax

PROJECT TEAM

Civil / Landscape:
William H. Gordon Associates, Inc
44084 Riverside Pkwy, Suite 100
Leesburg, VA 20176
703-729-9009 tel
703-478-8517 fax

Structural:
Linton Engineering, Inc.
8229 Boone Boulevard
Vienna, VA 22182
571-323-0320 tel
571 323-0689 fax

Plumbing/ Fire Protection/ Mechancial/ Electrical
Landmark Facilities Group
252 East Avenue
Norwalk, CT 06855
203-866-4626 tel
203-866-8019 fax

REVISIONS

1 Addendum #1 8-4-10
2
3
4
5
DATE

DRAWING TITLE

GEO- EXCHANGE PIPING PLAN & DETAILS

DRAWING INFORMATION

July 16, 2010
DATE OF ISSUE
BID DOCUMENTS
DESCRIPTION

SCALE: NOT TO SCALE
DRAWN BY: AH
PROJECT #
FILE NAME

DRAWING NUMBER

M104

Copyright BH+A, Inc.