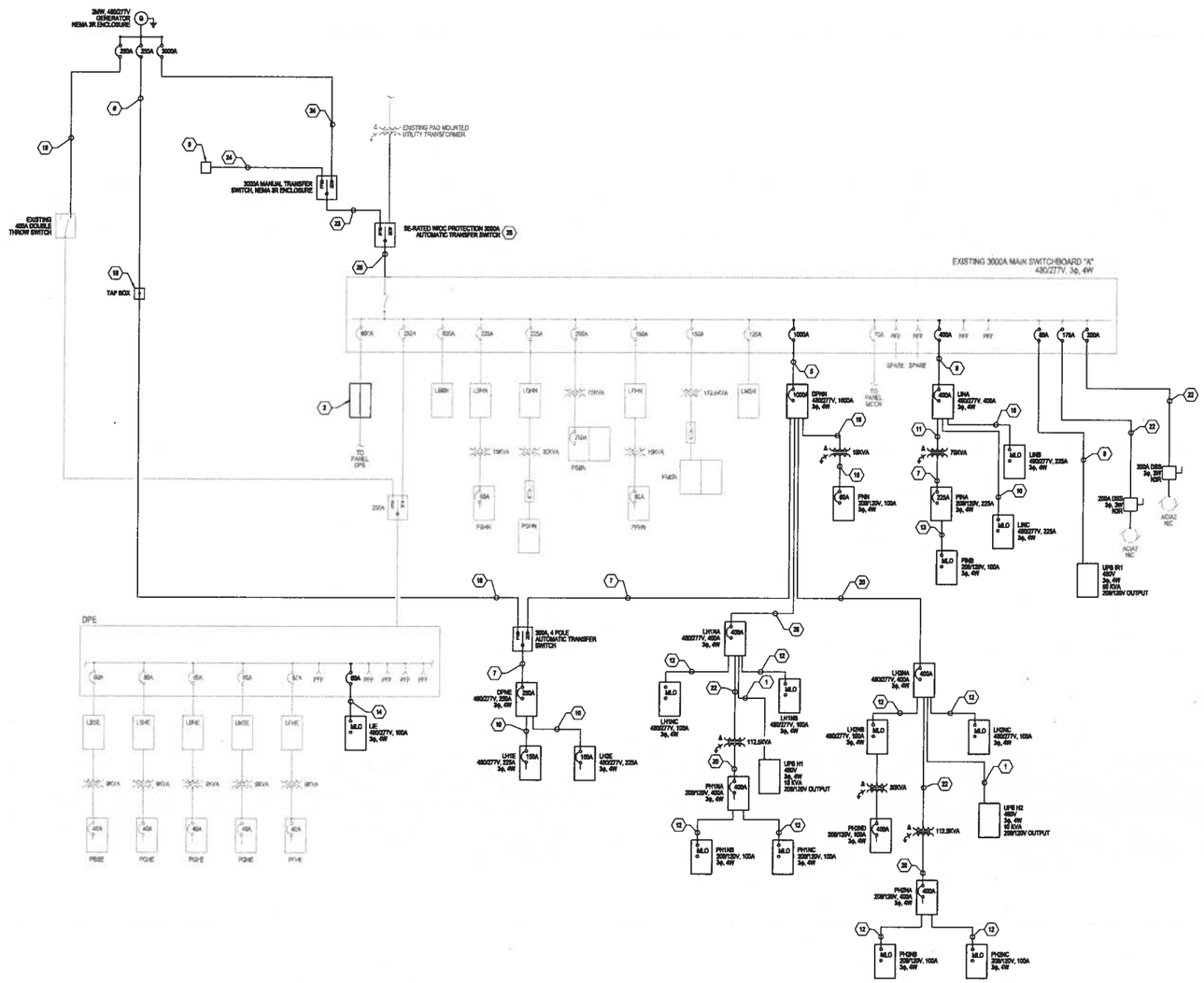

1 POWER ONE-LINE DIAGRAM

NONE

SHEET KEYNOTES

1. (3) #12 + (1) #12 GND IN 1" EMT.
2. REMOVE EXISTING TRANSFER SWITCH AND INSTALL TAP BOX.
3. 3000A CONNECTION FOR ROLL-UP GENERATOR.
4. 400A CONNECTION FOR ROLL-UP GENERATOR.
5. 8 SETS OF (4) 600 KCMIL AL + (1) 6/0 AL GND IN 4" C.
6. (4) 6350 KCMIL AL + (1) #1/0 AL GND IN 3" PVC. CONDUCTORS SHALL BE RUN IN EXISTING PATHWAYS.
7. (4) 6350 KCMIL AL + (1) #1/0 AL GND IN 3" EMT.
8. 2 SETS OF (4) 6350 KCMIL AL + (1) #1/0 AL GND IN 3" GRS.
9. (3) #3 + (1) #8 GND IN 1½" EMT.
10. (4) #350 AL + (1) #4 AL GND IN 2" C.
11. (3) #2 + (1) #8 GND IN 1½" EMT.
12. (4) #2 + (1) #8 GND IN 1½" GRS.
13. (4) #2 + (1) #8 GND IN 1½" EMT.
14. (4) #300 AL + (1) #8 AL GND IN 2" GRS.
15. (4) #8 + (1) #10 GND IN 1" C.
16. (4) #10 + (1) #10 GND IN 1" EMT.
17. (4) #350 KCMIL + (1) #4 GND IN 2" GRS.
18. (4) #350 KCMIL AL + (1) #1/0 AL GND IN 2" C.
19. INSTALL TAP BOX IN PLACE OF DEMOLISHED 800A STANDBY ATS IN MAIN ELECTRICAL ROOM. ROUTE NEW FEEDER PATHWAY OUT THE TOP OF TAP BOX AND ROUTE WITH NEW 1000A FEEDER TO HOUSING NODE ELECTRICAL ROOM.
20. 2 SETS OF (4) # 250 KCMIL AL + (1) # 1 AL GND IN 2 ½" EMT.
21. 2 SETS OF (4) # 250 KCMIL AL + (1) # 1 AL GND IN 2 ½" GRS.
22. (3) # 4/0 AL + (1) # 4 AL GND IN 2 ½" EMT.
23. 8 SETS OF (4) # 600 KCMIL AL + (1) # 600 KCMIL AL GND IN 4" EMT.
24. 8 SETS OF (4) # 600 KCMIL AL + (1) # 600 KCMIL AL GND IN 4" PVC.
25. 3000A SE-RATED TRANSFER SWITCH WILL BE INSTALLED IN PLACE OF EXISTING CT CABINET IN MAIN ELECTRICAL ROOM. LOAD CONNECTION ON ATS WILL BE CONNECTED TO EXISTING BOLTED PRESSURE SWITCH VIA COPPER BUS.
26. NEW 3000A ATS SHALL BE CONNECTED TO EXISTING BOLTED PRESSURE SWITCH VIA COPPER BUS.

DRAWING CONTROL	
PROJECT NUMBER:	673111
ISSUE DATE:	06/05/2008
DRAWN BY:	P. DOLAN
DRAWING QC:	E. HUGHES
DESIGN ENGINEER:	D. ROUSH
LEAD ENGINEER:	D. ROUSH
PRINCIPAL ENGINEER:	R. BARNES
PROJECT MANAGER:	A. HINNERS
QC ENGINEER:	S. WONG

Loudoun County Virginia 1757

Loudoun County
Adult Detention Center (ADC)
Phase II

Leesburg, Virginia

Hensel Phelps Construction Co.

HENSEL PHELPS CONSTRUCTION CO.
14501 Sweitzer's Corporate Center Suite 207
Chantilly, VA 20151

HSMM - AECOM
Architect
Structural Engineer
Mechanical Engineer
100 Fairfax Blvd., Virginia Beach, VA 23510

ARRINGTON WATKINS ARCHITECTS
Architects
5.00 N. 1st Street Suite 101
Phoenix, AZ 85004

LIMBACH CO. LLC
Mechanical Engineers / LPI Service Dr
Lanham MD 20706

M.C. DEAN
Electrical Engineers & Security Engineers
2001 Drake Road Suite 100 20190

EAST COAST FIRE PROTECTION
Life Safety and Fire Protection Engineering 14101 Sullyfield Circle, Suite 400 chantilly, VA 20151

NORMENT INDUSTRIES
Structural Supports Contractor
5300 Storke Hwy. Montgomery, AL 36110

SCHNABEL ENGINEERING NORTH, LLC
Structural Engineer
111 Sylvan Ave., Ste. 100 Leesburg, VA 20176

TIMMONS GROUP
Civil Engineer
115 Wild Street, Charlottesville, VA 22902

ISSUE FOR CONSTRUCTION

SEALS

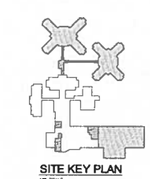

SITE KEY PLAN

NO SCALE

REV	DATE	DESCRIPTION	APP

COMM NO:	JOB NO: 0000
ISSUE DATE: 06/05/2008	
DESIGNED BY:	DRAWN BY:
CHECKED BY:	SUBMITTED BY: JC

ELECTRICAL

POWER
ONE-LINE DIAGRAM

EP601