STRUCTURE INFORMATION			DRAINAGE AREA RUNOFF & FLOW INFORMATION									PIPE INFORMATION								MANHOLE INFORMATION					REMARKS
					CA					FLOW							n = 0 013			INVERTS					
UPPER (OUT)	LOWER (IN)	U/S STRUCTURE TYPE	DRAIN AREA (ACRES)	RUN OFF COEFF (C)	INC	CUM	INLET TIME (MIN)	T_c (MIN)	RAINFALL INTENSITY (IN/HR)	Q(INC) (CFS)	Q(CUM) (CFS)	LENGTH (FT)	SLOPE (%)	DIA (IN)	MATERIAL	CAPACITY (CFS)	ACT FLOW DEPTH (FT)	VELOCITY (FPS)	UPPER (OUT)	LOWER (IN)	FLOW TIME SEC	TOP OF U/S STR	U/S STR DEPTH (FT)	
B5	B4	DI-1	0 9701	0 71	0.69	0 69	5	5	7 27	5.01	5.01	34	2.22	15	RCP	9.62	0.64	7.94	458 00	457 25	4	462 40	4.40	
B3	B2	JB 1			0.00	0 00	5	5	7 27	0 74	0 74	51	0.54	15	RCP	4.63	0.34	2.65	456 50	456 24	19	464 75	8.25	
B2	B1	MH 1			0.00	0 00	5	5	7 27	0 00	0 74	26	0.54	15	RCP	4.73	0.33	2.71	456 04	455 90	10	466 00	9.96	
B1	C3	MH-1			0.00	0 00	5	5	7 27	0.00	1.49	19	0.53	15	RCP	4.72	0.48	3.36	455 70	455 60	6	466 20	10.50	
C3	C2	MH 1			0.00	0 00	5	5	7 27	0.00	1.49	74	8.21	15	RCP	16.51	0.24	8.32	453 85	447 75	9	462 50	8.65	
C2	C1	DI-1	0 1142	0 70	0.08	0 08	5	5	7 27	0.58	2 07	92	3.87	15	RCP	12.71	0.34	7.37	447 55	444 00	12	453 00	5.45	
C1	A6	MH-1			0.00	0 08	5	5	7 27	0 00	2.07	45	5.93	15	RCP	15.08	0.30	8.70	440 13	437 25	5	446 10	5.97	
C4	C3	DI-1	0 1439	0 72	0.10	0 10	5	5	7 27	0.75	0.75	33	0.70	15	RCP	5.42	0.31	3.01	456 23	456 00	11	461 44	5.21	
D3	D2	STORMCEPTOR STC 900(	0 4720	0 76	0.36	0 36	5	5	7 27	2.61	2.61	30	2.00	15	RCP	9.80	0.44	6.57	460 00	459 30	5	464 60	4.60	

STORM SEWER DESIGN COMPUTATIONS

STRUCTURE INFORMATION			DRAINAGE AREA RUNOFF & FLOW INFORMATION									PIPE INFORMATION								MANHOLE INFORMATION					REMARKS
					CA					FLOW							n = 0 013			INVERTS					
UPPER (OUT)	LOWER (IN)	U/S STRUCTURE TYPE	DRAIN AREA (ACRES)	RUN OFF COEFF (C)	INC	CUM	INLET TIME (MIN)	T_c (MIN)	RAINFALL INTENSITY (IN/HR)	Q(INC) (CFS)	Q(CUM) (CFS)	LENGTH (FT)	SLOPE (%)	DIA (IN)	MATERIAL	CAPACITY (CFS)	ACT FLOW DEPTH (FT)	VELOCITY (FPS)	UPPER (OUT)	LOWER (IN)	FLOW TIME SEC	TOP OF U/S STR	U/S STR DEPTH (FT)	
B5	B4	DI 1	0 9701	0 71	0.69	0 69	5	5	7 27	5.01	5.01	34	2.22	15	RCP	9.62	0.64	7.94	458 00	457 25	4	462 40	4.40	
B3	B2	JB 1			0.00	0 00	5	5	7 27	0 74	0 74	51	0.54	15	RCP	4.63	0.34	2.66	456 50	456 24	19	464 75	8.25	
B2	B1	MH-1			0.00	0 00	5	5	7 27	0 00	0 74	26	0.54	15	RCP	4.73	0.33	2.71	456 04	455.90	10	466 00	9.96	
B1	C3	MH 1			0.00	0 00	5	5	7 27	0 00	1 49	19	0.53	15	RCP	4.72	0.48	3.36	455 70	455.60	6	466 20	10.50	
C3	C2	MH-1			0.00	0 00	5	5	7 27	0.00	1 49	74	8.21	15	RCP	16.51	0.24	8.32	453 85	447 75	9	462 50	8.65	
C2	C1	DI-1	0 1142	0 70	0.08	0 08	5	5	7 27	0.58	2.07	92	3.87	15	RCP	12.71	0.34	7.37	447 55	444 00	12	453 00	5.45	
C1	A6	MH-1			0.00	0 08	5	5	7 27	0 00	2.07	45	5.93	15	RCP	15.08	0.30	8.70	440 13	437 25	5	446 10	5.97	
C4	C3	DI-1	0 1439	0 72	0.10	0 10	5	5	7 27	0.75	0.75	33	0.70	15	RCP	5.42	0.31	3.01	456 23	456 00	11	461 44	5.21	
D3	D2	STORMCEPTOR STC 900(	0 4720	0 76	0.36	0 36	5	5	7 27	2.61	2.61	30	2.00	15	RCP	9.80	0.44	6.57	460 00	459 30	5	464 60	4.60	

HYDRAULIC GRADE LINE COMPUTATION

INLET STATION (1)	OUTLET INVERT ELEV	OUTLET W S E (2)	Do (in) (3)	Qo (4)	Lo (5)	Sfo (ft /ft) (6)	JUNCTION LOSS COMPUTATIONS Hf (7)	Vo (8)	Ho (9)	QI (10)	VI (11)	QiVI (12)	Vi^2 2g	HI (13)	Angle (14)	Hdelta (15)	Ht (16)	1 3Ht (17)	0 5Ht (18)	FINAL H (19)	INLET W S E (20)	STR OPENING ELEV (21)
B5	457.25	458 25	15	5.01	34	0.0060	0.20	7.94	0.24			0.00	0.00	0.00	0	0.00	0.24	0.12	0.16	0.36	458.61	462.40
C1	437.25	438 25	15	2.07	45	0.0010	0.05	8.70	0.29	2.07	7.37	15.26	0.64	0.30	12	0.00	0.59	0.77	0.38	0.43	438 68	446.10
C2	444.00	445 00	15	2.07	92	0.0010	0.09	7.37	0.21	1.49	8.32	12.32	0.87	0.38	0	0.00	0.59	0.75	0.38	0.48	445 48	453.00
C3	447.75	448 75	15	1.49	74	0.0005	0.04	8.32	0.12	1.49	3.36	5.00	0.18	0.09	45	0.07	0.40	0.52	0.26	0.30	449.05	462.50
										0.75	3.01	2.27	0.14	0.05	0	0.00	0.05	0.00	0.00	0.03		
B1	455.60	456 60	15	1.49	19	0.0005	0.01	3.36	0.04	0.74	2.71	1.99	0.11	0.04	48	0.01	0.12	0.16	0.08	0.09	456 69	466.20
B2	455.90	456 90	15	0.74	26	0.0001	0.00	2.71	0.00	0.74	2.65	1.95	0.11	0.01	90	0.00	0.14	0.18	0.09	0.10	457 00	466.00
B3	456.24	457 24	15	0.74	51	0.0001	0.01	2.65	0.01			0.00	0.00	0.00	0	0.00	0.00	0.04	0.02	0.02	457 26	464.75
C4	458.00	457 00	15	0.75	33	0.0001	0.00	3.01	0.04			0.00	0.00	0.00	0	0.00	0.04	0.05	0.02	0.03	457 03	461.44
D3	459.30	460 30	15	2.61	30	0.0016	0.05	4.75	0.09			0.00	0.00	0.00	0	0.00	0.09	0.11	0.06	0.11	460 41	464.60

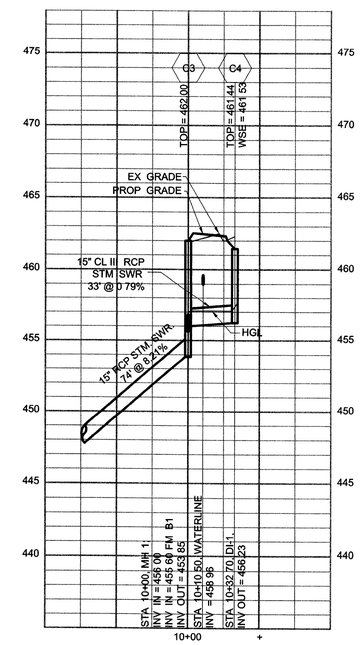

STORM PROFILE C4 - C3
STA 10+00 - 10+33
HORZ 1" = 50'
VERT 1" = 5'

Bury+Partners
ENGINEERING SOLUTIONS
Consulting Engineers and Surveyors
3810 Concorde Parkway Suite 1000
Chantilly, Virginia 20151
Tel 703/968-0090 Fax 703/968-4866
Bury+Partners-VA Inc

©Copyright 2007

MIDDLEBURG VOLUNTEER FIRE DEPARTMENT BUILDING ADDITION
FINAL SITE PLAN
BLUE RIDGE DISTRICT
TOWN OF MIDDLEBURG, VIRGINIA

Storm Sewer Profiles & Computations

DATE	NO	REVISION
5 2 08	1	REMOVED MEETING HALL
7 10 08	2	REV 2ND REVIEW COMMENTS

COMMONWEALTH OF VIRGINIA
WILLIAM D HUME
No 0037880
7/10/08
PROFESSIONAL ENGINEER

SCALE	AS SHOWN
DATE	11-16-07
DRAWN BY	PJC/BP
DESIGNED BY	PJC
REVIEWED BY	MS
PROJ NO	220550002

SHEET 6 OF 18