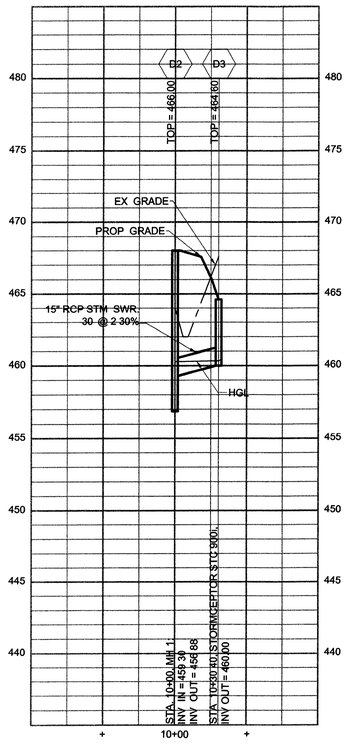

STORM PROFILE D3-D2
STA 10+00 - 10+30
HORZ 1" = 50'
VERT 1" = 5'

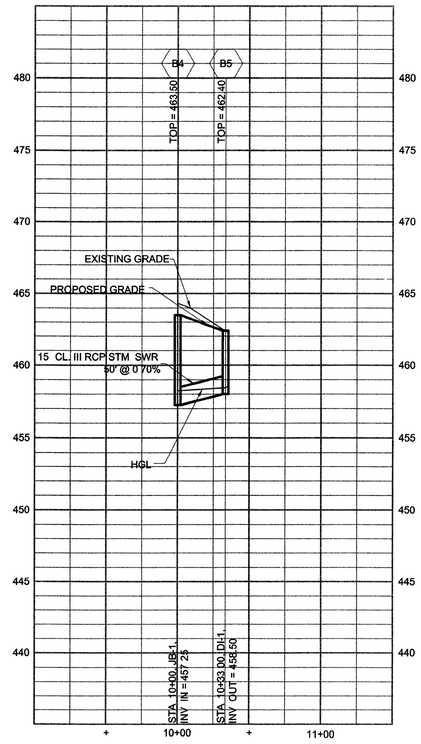

STORM PROFILE B5 - B4
STA 10+00 - 10+33
HORZ 1" = 50'
VERT 1" = 5'

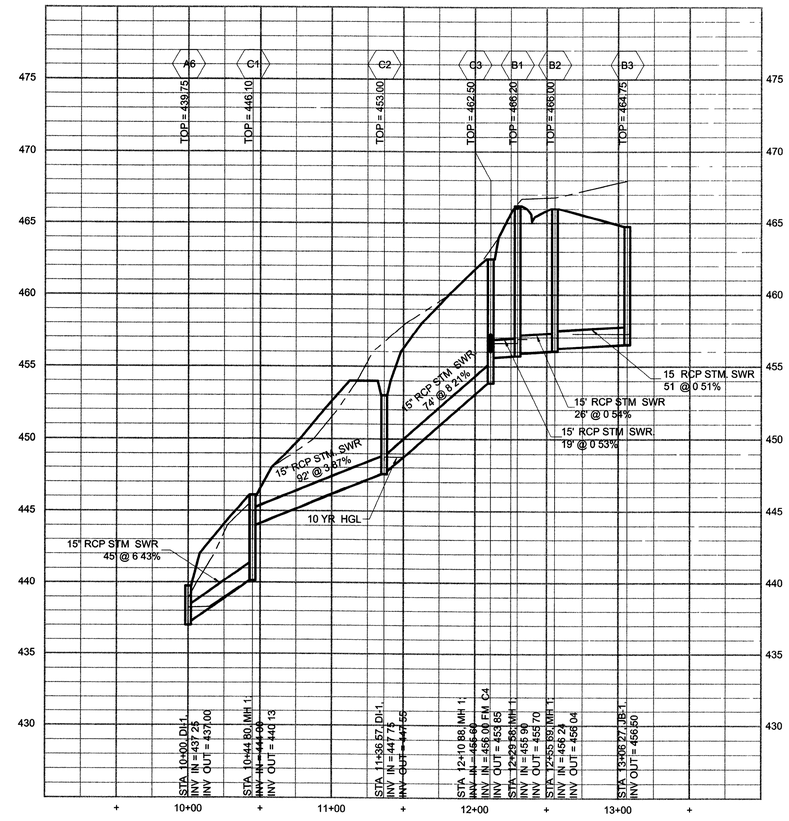

STORM PROFILE B3 - A6
STA 10+00 - 13+06
HORZ 1" = 50'
VERT 1" = 5'

Burry+Partners
ENGINEERING SOLUTIONS
Consulting Engineers and Surveyors
3810 Concorde Parkway Suite 1000
Chantilly Virginia 20151
Tel 703/968-0900 Fax 703/968-4856
Burry+Partners-VA, Inc

©Copyright 2007

MIDDLEBURG VOLUNTEER FIRE DEPARTMENT BUILDING ADDITION
FINAL SITE PLAN
BLUE RIDGE DISTRICT
TOWN OF MIDDLEBURG, VIRGINIA

Storm Sewer Profiles & Computations

NO	DATE	REVISION
1	5.2.08	REMOVED MEETING HALL
2	7.10.08	REV. 2ND REVIEW COMMENTS

COMMONWEALTH OF VIRGINIA
WILLIAM D HUME
No 0037880
7/10/08
PROFESSIONAL ENGINEER

SCALE	AS SHOWN
DATE	11-16-07
DRAWN BY	PJC/BP
DESIGNED BY	PJC
REVIEWED BY	MS
PROJ NO	220550002

SHEET
7
OF 18