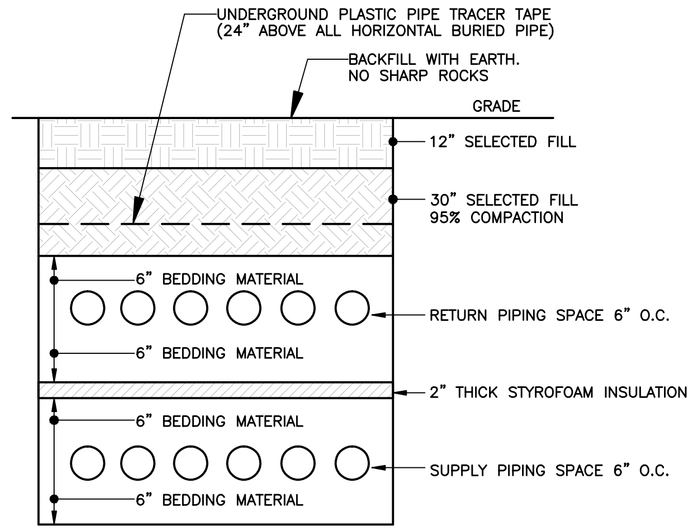

NOTE: FOR PIPE BEDDING USE SAND OR STONE DUST

GEOTHERMAL TRENCH DETAIL

N.T.S.

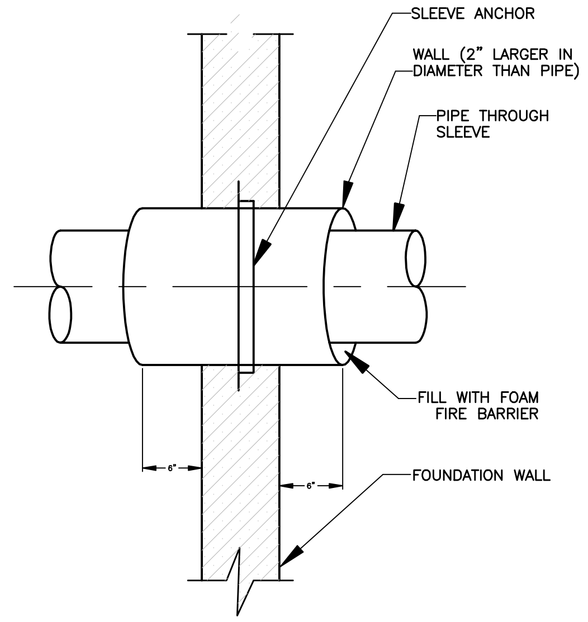

PIPE PENETRATION DETAIL

N.T.S.

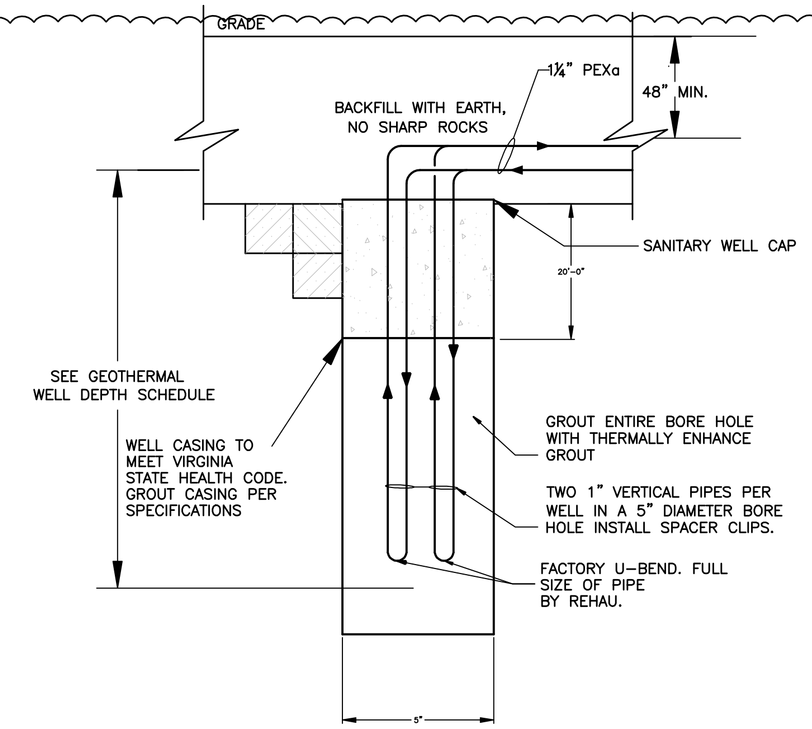

GEOTHERMAL WELL DETAIL

N.T.S.

GEOTHERMAL INFORMATION	
GEOTHERMAL WELL INFORMATION	
NUMBER OF WELLS	15
WELL DEPTH (FEET)	14 @345' AND 1 @ 300'
NUMBER OF WELL FIELDS	3
NUMBER OF WELLS PER FIELD	5
GEOTHERMAL PIPE SIZE	
WELL SIZE (IN.)	1"
BRANCH SIZES (IN.)	1¼"
MANIFOLD SIZE (IN.)	2½"
GEOTHERMAL PIPE MATERIAL	
WELL PIPE	PEXa BY REHAU
BRANCH PIPE	PEXa BY REHAU
S & R MAIN PIPE	PEXa BY REHAU
MANIFOLD PIPE	PEXa BY REHAU
GEOTHERMAL VAULT INFORMATION	
MODEL 860 MH	BY MIDLAND CORPORATION
FLUID INFORMATION	
FLUID	WATER
FLOW PER WELL (GPM)	5.5
MAXIMUM ENTERING WATER TEMP.	100.6° F.
MINIMUM ENTERING WATER TEMP.	48.0° F.

NOTES

1. GEOTHERMAL LINES RUN HORIZONTAL SHALL BE 48" BELOW FINISHED GRADE PER MANUFACTURES INSTALLATION DIRECTIONS.

2. SHORTEN VAULT MANHOLE SUCH THAT TOP OF MANHOLE COVER IS 12" BELOW GRADE.

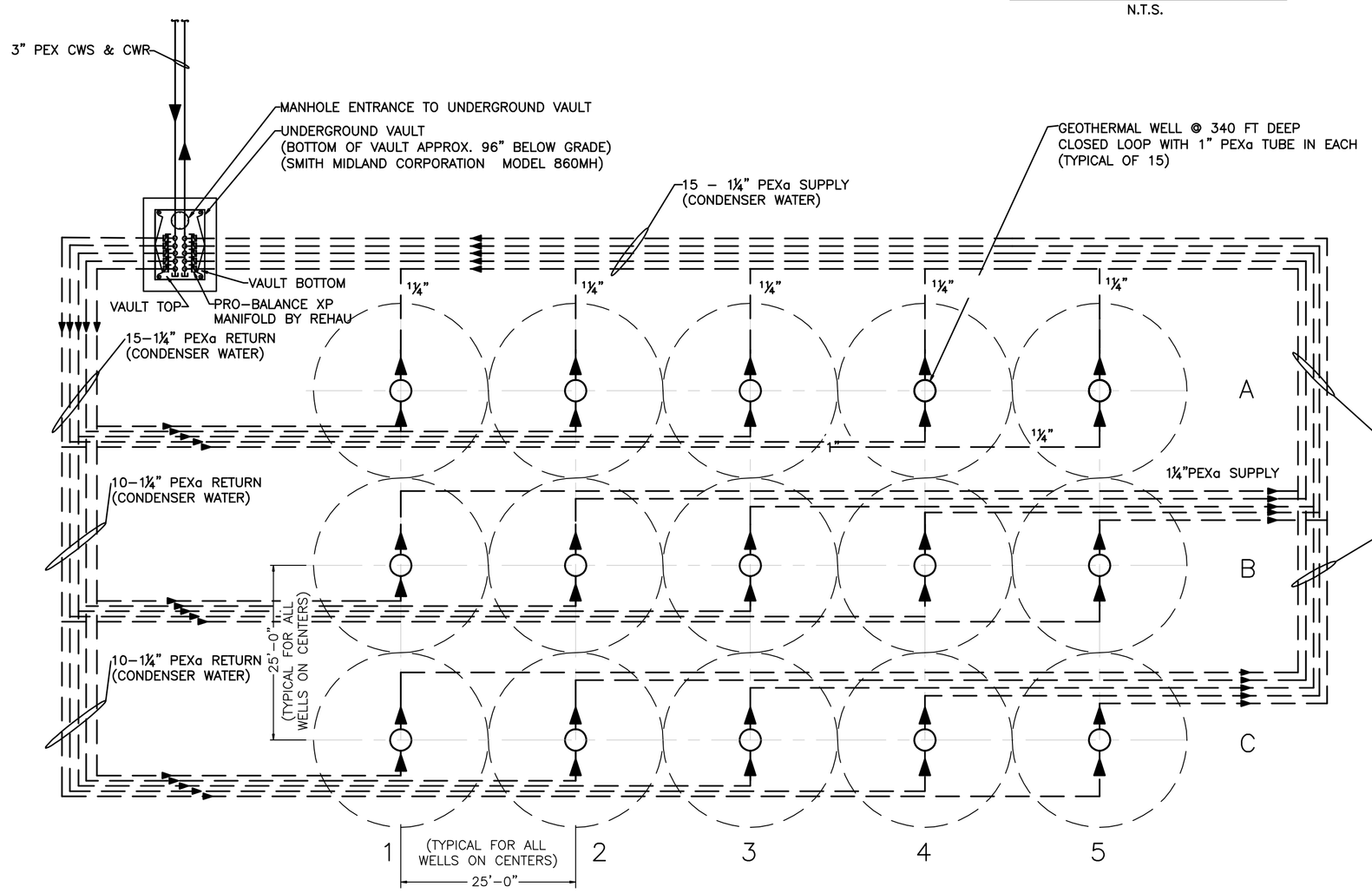

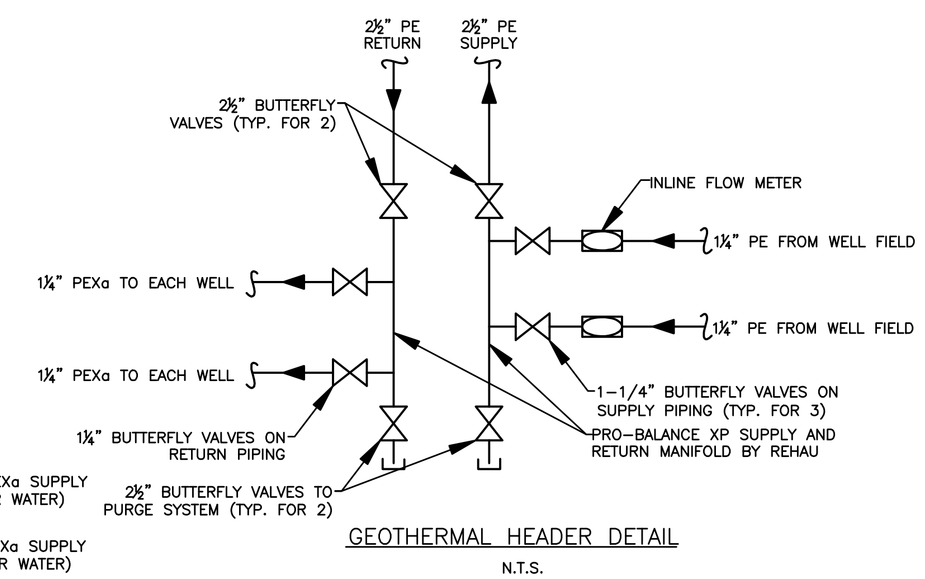

GEOTHERMAL HEADER DETAIL

N.T.S.

MECHANICAL GEOTHERMAL SPECIFICATIONS

1. ALL WORK IS TO BE INSTALLED IN ACCORDANCE WITH 2003 VIRGINIA UNIFORM STATEWIDE BUILDING CODE PART I (THE VIRGINIA CONSTRUCTION CODE), 2003 INTERNATIONAL BUILDING CODE, 2003 INTERNATIONAL MECHANICAL CODE, 2003 INTERNATIONAL PLUMBING CODE, 2003 INTERNATIONAL FIRE CODE, AND ANY OTHER APPLICABLE CODES. THE CONTRACTOR SHALL OBTAIN ALL NECESSARY PERMITS ASSOCIATED WITH THE DESCRIBED WORK.

2. VERIFY ALL EXISTING CONDITIONS PRIOR TO COMMENCING ANY WORK. BORE HOLE DRILLING CONTRACTOR SHALL BE RESPONSIBLE FOR LOCATING ALL GEOTHERMAL WELLS AND COORDINATING THEM WITH ARCHITECT AND GENERAL CONTRACTOR. REFER TO CIVIL ENGINEER'S PLANS FOR EXACT LOCATIONS OF SITE UTILITIES.

3. THE CONTRACTOR SHALL BE RESPONSIBLE FOR ALL WORKING CONDITIONS AND SHALL MAINTAIN A SAFE WORKING ENVIRONMENT AT THE JOB SITE FOR ALL EMPLOYEES.

4. ALL EXCAVATION, TRENCHING, DRILLING, CASING, PUMPING, BACKFILLING AND WORK ASSOCIATED WITH THE INSTALLATION OF BELOW GRADE HORIZONTAL AND VERTICAL GEOTHERMAL PIPING SHALL BE BY THE BORE HOLE DRILLING CONTRACTOR. CONTRACTOR SHALL PROVIDE MEANS FOR CONTROL OF GROUNDWATER BROUGHT UP TO THE SURFACE DURING GEOTHERMAL WELL DRILLING.

5. THE BORE HOLE DRILLING CONTRACTOR SHALL BE EXPERIENCED IN DEEP BORE HOLE DRILLING AND SHALL HAVE A MINIMUM OF TEN YEARS DRILLING EXPERIENCE WITHIN THE GEOGRAPHIC VICINITY OF THE PROJECT OR SHALL SUBCONTRACT TO AN APPROVED DRILLING CONTRACTOR WITH EQUIVALENT EXPERIENCE.

6. THE VERTICAL HOLES SHALL BE DRILLED NO CLOSER THAN 25 FEET APART AND SHALL, ON THE CASE OF WET HOLES, BE HELD OPEN BY A "MUD" CASING SO THAT THE PIPING CAN BE INSERTED. THE PIPING SHALL BE TESTED IN ACCORDANCE WITH OTHER SECTIONS OF THIS SPECIFICATION PRIOR TO INSERTION. LOOPS MUST BE INSTALLED FROM OR BY A MECHANICAL DEVICE, SO THAT THE PIPE IS NOT ROLLED OUT ON THE GROUND BEFORE INSERTION.

7. FUSION ELBOWS SHOULD BE USED AT THE BORE HOLE SEAL; HOWEVER, THE BORE HOLE SEAL MAY BE AFFIXED TO THE CASING 90 INCHES BELOW GRADE IF THE LOOP TUBING CAN BE CURVED ON A RADIUS NO LESS THAN 60 INCHES. WHEN ELBOWS ARE UTILIZED, THE BORE HOLE CASING IS TO BE CUT OFF AT LEAST 34 INCHES BELOW GRADE, (52 INCHES IS RECOMMENDED). SO THAT THE ELBOWS AND CONNECTING LATERAL RUNS NEVER COME NEARER THAN 48 INCHES TO THE FINAL GRADE. ELBOWS MUST BE LOWER THAN ALL REMAINING PIPING ON THE SYSTEM TO ELIMINATE AIR ENTRAPMENT AT THE ELBOW. ALL POLYETHYLENE PIPE SHOULD BE SUPPORTED BEFORE AND DURING BACKFILL, WITH WOOD, STYROFOAM OR SPRAYED POLYETHYLENE FOAM SUPPORTS.

8. THE PIPING SHALL BE CAPPED AND PROTECTED UNTIL SUCH TIME THAT IT IS CONNECTED TO THE MANIFOLD PIPING.

9. SUPPLY AND RETURN PIPES AND/OR BUNDLES OF SUPPLY AND RETURN PIPES MUST BE A MINIMUM OF SIX INCHES APART IN TRENCHES, WITH AN ADDITIONAL INCH ADDED PER PIPE IN BUNDLES OVER ONE PIPE; E.G., FOUR PIPE BUNDLES TO BE TEN INCHES APART: 6"+ 1"+ 1"+ 1"+ 1"=10".

10. APPROVED BORE HOLE SEALS SHOULD BE TIGHTENED TO MANUFACTURER'S SPECIFICATIONS.

11. ALL FOUNDATION PENETRATIONS ARE TO BE 48" BELOW GRADE, AND THROUGH A SLEEVE OF EITHER METAL OR PLASTIC CONSTRUCTION SUBJECT TO THE ENGINEER'S REVIEW. THE SLEEVE IS TO BE PROPERLY CEMENTED INTO THE FOUNDATION AND SEALED WITH INSULATED PACKING AND WATER-PROOF MASTIC.

12. ALL LATER PIPES FROM BORE HOLE SEAL THROUGH BUILDING PENETRATION WILL BE SPRAYED WITH CLOSED CELL POLYETHYLENE FOAM INSULATION, AT LEAST ONE INCH THICK, WHEN SPECIFIED. SPRAY FOAM SHOULD BE NO LESS THAN 1.75 LBS/FT. 3. IF SPRAYED FOAM IS USED, ALL SEALS AND LATERAL PIPING MUST BE APPROVED BY AN INSPECTOR PRIOR TO INSULATING.

13. WHEN SPRAY FOAM IS NOT USED, THE FIRST LAYER OF BACKFILL IS TO BE 12" OF SAND OR "DRILLINGS", SIX INCHES BELOW THE LATERAL PIPING, AND SIX INCHES ABOVE. THEN IN AS MANY APPLICATIONS AS NECESSARY FILL WITH TWELVE TO EIGHTEEN INCHES OF EARTH (CAREFULLY TAMPED), AND FINALLY FILL REMAINDER OF TRENCH WITH SOIL UNTIL GRADE IS ACHIEVED AS SPECIFIED BY THE GENERAL CONTRACTOR.

14. THE SYSTEM MUST BE POWER FLUSHED PRIOR TO FINAL FILL. A MINIMUM FLOW RATE OF 2 FEET PER SECOND MUST BE ACHIEVED AND MAINTAINED FOR 20 MINUTES TO ELIMINATE TRAPPED AIR AND DEBRIS FROM PIPING. THE ENTRAPMENT OF AIR IN THE EARTH SYSTEM WILL SEVERELY IMPEDE THE SYSTEM PERFORMANCE. EXTREME CARE MUST BE TAKEN WHEN FLUSHING THE SYSTEM.

15. BACKFILLING OF THE TRENCHING MAY BE PERFORMED AFTER THE SYSTEM HAS BEEN SUCCESSFULLY TESTED, CHARGED AND THE ENGINEER, AT HIS DISCRETION, HAS INSPECTED THE INSTALLATION.

16. THE CONTRACTOR SHALL MARK ALL BURIED PIPE WITH UNDERGROUND "WARNING TAPE" AT A DEPTH OF 24 INCHES.

17. THE CONTRACTOR SHALL MAINTAIN AN ACCURATE RECORD OF ALL PIPE LOCATIONS AND AT THE COMPLETION OF THE WORK, DELIVER TO THE OWNER A SET OF "AS-BUILT" SITE PLANS.

18. THE CONTRACTOR SHALL WARRANTY (100% PARTS AND LABOR) THE FUNCTIONAL INTEGRITY OF THE OUTSIDE PIPING SYSTEM FOR ONE YEAR.

19. THE BORE HOLE DIAMETER FOR THE WELLS SHALL BE SIZED IN ACCORDANCE WITH THE DRILLING REGULATIONS OF VIRGINIA, REFER TO D.E.P. PERMIT CONDITION.

20. THE WELLS SHALL BE "CASED" TO BEDROCK IN ACCORDANCE WITH THE DRILLING REGULATIONS OF VIRGINIA. AFTER GROUTING, THE CASING MAY BE REMOVED.

21. PROVIDE SANITARY WELL SEALS IN ACCORDANCE WITH DRILLING REGULATIONS OF VIRGINIA. IF THE WELLS ARE FULLY GROUTED BOTTOM TO TOP, THE SANITARY WELL SEALS MAY BE OMITTED.

GROUTING (WELL/CASING)

22. BORE HOLES IN VERTICAL HEAT EXCHANGERS SHALL BE TREMI-GROUTED. GROUTING OF VERTICAL HEAT EXCHANGERS SHALL BE DONE IN ACCORDANCE WITH JURISDICTIONAL REQUIREMENTS AND "OSHPA" STANDARDS. GROUTING WITH CEMENT OR BENTONITE OR WITH MIXTURE OF THE SAME, SHALL IMMEDIATELY FOLLOW THE COMPLETION OF DRILLING AND INSTALLATION OF EACH HEAT EXCHANGER. A LARGE CAPACITY GROUT MIXER, SEPARATE HOLDING TANK ARE REQUIRED AND A MINIMUM OF 1" DIAMETER POLYETHYLENE TUBING SHALL BE USED AS THE TREMI-GROUT PIPE. THE TREMI-GROUT PIPE SHALL BE ATTACHED TO THE "U" BEND HEAT EXCHANGER BEFORE IT IS LOWERED INTO THE GROUND.

23. WHEN HEAT EXCHANGER FIELD IS EXPECTED TO OPERATE ABOVE FREEZING (NO ANTI-FREEZE SYSTEM), BENTONITE-BASED GROUTS SHALL BE USED. WHEN HEAT EXCHANGER FIELD IS EXPECTED TO OPERATE BELOW FREEZING (ANTI-FREEZE SYSTEM), IN VERY DENSE OR HARD SOLIDS OR ROCK, CEMENT BASED GROUT SHALL BE USED.

24. GROUTING PROCEDURES TO BE FOLLOWED:

A. MONITOR THE GROUTING OPERATION TO ENSURE GROUT IS BEING ADEQUATELY MIXED IN CORRECT PROPORTIONS AND THAT THE VISCOSITY IS ADEQUATE FOR PUMPING DOWN THE BOREHOLE.

B. THE GROUT CONTRACTOR SHOULD HAVE SPARE GROUT PIPES, HOSES AND FITTINGS, READILY AVAILABLE ON-SITE.

C. A SCREW-TYPE PUMP OR A PISTON PUMP SHALL BE USED TO PUMP GROUTS DOWN THE BOREHOLE.

D. A 3 TO 4 INCH DIAMETER SUCTION LINE AND A 1 TO 2 INCH DISCHARGE LINE SHALL BE USED.

E. CEMENT-BASED GROUT SHALL CONSIST OF NEAT CEMENT WITH 3 TO 4 PERCENT BENTONITE POWDER BY WEIGHT.

F. A WATER TO CEMENT RATIO BY WEIGHT OF 0.55 TO 0.60 SHALL BE USED.

G. BENTONITE BASED GROUT SHALL BE BENSEAL/EZ-MUD OR BENSEAL/AQUA-GROUT OR AS DEEMED EQUAL BY ENGINEER.

PIPING SYSTEMS TEST

25. THE CONTRACTOR SHALL PROVIDE ALL NECESSARY EQUIPMENT AND SHALL PERFORM ALL WORK REQUIRED IN CONNECTION WITH ALL PIPING SYSTEM TESTS.

26. AT THE WATER WORKING PRESSURE OF THE PIPE INSTALLED, ALL WATER PIPING SYSTEMS SHALL BE TESTED. EACH SECTION TESTED SHALL BE SLOWLY FILLED WITH WATER. CARE SHALL BE TAKEN TO EXPEL ALL AIR FROM PIPES. IF NECESSARY, THE PRESSURE AS MEASURED AT THE POINT OF LOWEST ELEVATION, SHALL BE APPLIED FOR NOT LESS THAN ONE-HALF (1/2) HOUR. WHEN THE TEST PRESSURE HAS FALLEN OVER FIVE PERCENT (5%), THE POINT OF LEAKAGE SHALL BE FOUND, REPAIRED AND TESTING REPEATED. THIS PROCEDURE SHALL BE FOLLOWED UNTIL THE PIPING SYSTEMS HAVE BEEN PROVED ABSOLUTELY TIGHT. THE USE OF ANY CHEMICALS, ANY "STOP-LEAK" COMPOUNDS, ANY MASTIC OR ANY OTHER TEMPORARY MEANS SHALL NOT BE USED FOR REPAIRING LEAKS DURING OR SUBSEQUENT TO THESE TESTS.

27. AFTER INSERTION OF THE VERTICAL PIPING, THE CONTRACTOR SHALL ASSEMBLE THE "U-BEND" AND PIPING, CAP BOTH ENDS AND AIR AND WATER PRESSURE TEST THE PIPING TO A PRESSURE OF 100 PSI. THE TEST MUST BE MAINTAINED FOR FOUR (4) HOURS WITHOUT THE PRESSURE FALLING MORE THAN THREE (3) PSI.

28. LOOPS MUST PASS PRESSURE TESTS AT THE FOLLOWING MILESTONES:

A. BEFORE INSERTION INTO HOLE.

B. AFTER INSERTION INTO HOLE

C. AFTER PENETRATION OF FOUNDATION BY HORIZONTAL LATERAL, ALSO AFFIXED TO THE VERTICAL LOOP BEFORE FOAMING AND BACKFILL.

D. DURING START-UP AND ACCEPTANCE PROCEDURE OF COMPLETE SYSTEM.

29. CONTRACTOR IS RESPONSIBLE TO PROVIDE EVIDENCE OF AND CERTIFICATION OF PRESSURE TESTING, AND ACCEPTANCE OF ALL WORK PERFORMED BY SIGNATURE OF CONTRACT INSPECTOR. ALL SYSTEMS ARE TO BE TESTED, ADJUSTED AND BALANCED TO PROVIDE PERFORMANCE AS INDICATED ON DRAWINGS.

ARCHITECT

bh+a

Bergmann Hendrie + Archetype, Inc.
300 A Street
Boston, MA 02210
617 350-0450 Tel
617 350-0215 Fax
www.bhplus.com

PROJECT NAME

Bluemont Community Center

33846 Snickersville Turnpike
Bluemont, VA

CLIENT

Loudoun County, Virginia Department of Construction and Waste management

211 Gibson Street NW
Leesburg, VA 20176
(703) 737-8998 tel
(703) 771-5097 fax

PROJECT TEAM

Civil/ Landscape:
William H. Gordon Associates, Inc.
44064 Riverside Pkwy, Suite 100
Leesburg, VA 20176
703-729-9009 tel

Structural:
Linton Engineering, Inc.
8229 Boone Boulevard
Vienna, VA 22182
571-323-0320 tel

Plumbing/ Fire Protection/
Mechanical/ Electrical:
Landmark Facilities Group
282 East Avenue
Norwalk, CT 06855
203-866-4626 tel

REVISIONS

1	Addendum # 2	09/21/10
2		
3		
4		
5		

DATE

DRAWING TITLE

GEO- EXCHANGE PIPING PLAN & DETAILS

DRAWING INFORMATION

August 20, 2010
DATE OF ISSUE

Bid Documents
DESCRIPTION

SCALE: NTS
DRAWN BY: AH
PROJECT #:
FILE NAME:

DRAWING NUMBER

M104

Copyright BH+A, Inc.