SURVEYED BY_____
SUPERVISED BY_____
DESIGNED BY_____

DESIGN FEATURES RELATING TO CONSTRUCTION OR TO REGULATION AND CONTROL OF TRAFFIC MAY BE SUBJECT TO CHANGE AS DEEMED NECESSARY BY THE DEPARTMENT

REVISED	STATE	FEDERAL AID PROJECT	STATE ROUTE	STATE PROJECT	SHEET NO.
NEW 10/22/08	VA.		7		20(7)

TYPICAL 4'X4'X4' VAULT LEVEL 3 AND XO

TYPICAL 4'x4'x4' MANHOLE DETAIL

MANHOLE COVER

WESTERN IRONWORKS #8-30

NOTE:

1. EACH COVER TO HAVE (4) PICK SLOTS FOR REMOVAL.
2. STAMP "TCG" IN COVER.
3. ACCESS HOLE: 30"

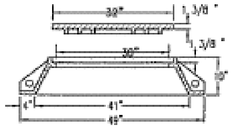

RING AND COVER DETAIL

RING WT.: 380 LBS. COVER WT.: 300LBS.

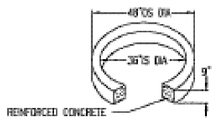

TYPICAL NECK EXTENSION DETAIL

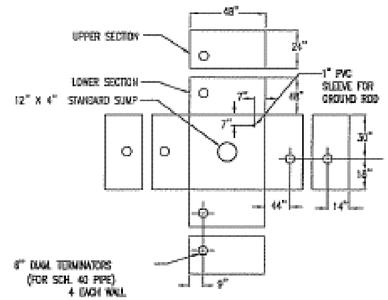

MANHOLE 4'Lx4'Wx4'H

(2 SECTIONS)

PLAN VIEW: TERMINATORS, SUMP, & GROUND ROD SLEEVE

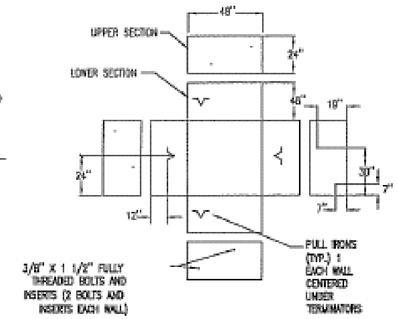

MANHOLE 4'Lx4'Wx4'H

(2 SECTIONS)

PLAN VIEW:

BOLT INSERTS & PULL IRONS

NOTE:
INSERT SPACING ARRANGED FOR FIBER OPTIC CABLE "3M" SPLICE CASE.

4'x4'x6' DALWORTH QUICKSET MANHOLE (OR 4'X4'X2' MANHOLE)

6" WALLS AND 48" HEADROOM

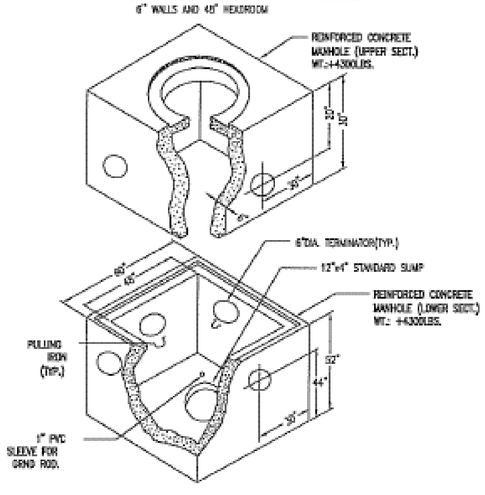

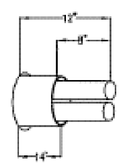

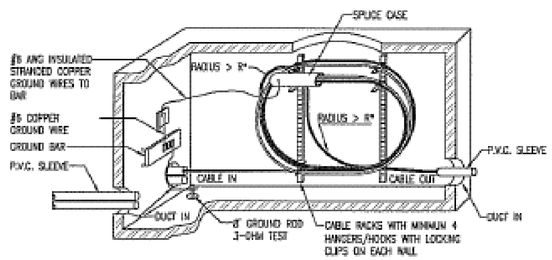

TYPICAL HANDHOLE WITH SPLICE COIL

CONSTRUCTION NOTES:

1. VOID IN EXCAVATED AREAS TO BE BACKFILLED WITH SELECT MATERIAL.
2. BOTTOM OF EXCAVATED PIT TO BE BACKFILLED WITH 12" OF CRUSHED STONE (3/4" GRADE).
3. SHORING WILL BE REQUIRED.
4. ALL MANHOLES SHALL BE PLACED WITH COVER FLUSH WITH EXISTING GRADE.

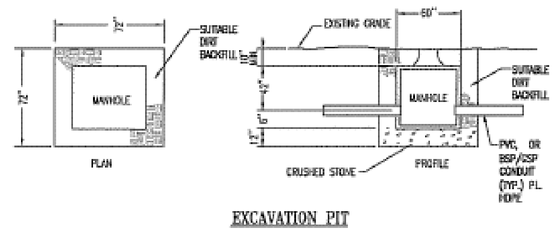

EXCAVATION PIT

express-tek
EXPRESS TECHNOLOGIES, INC.
1127 INTERNATIONAL PARKWAY SUITE 293
FREDERICKSBURG, VA 22406
540.752.6691 (O) 540.752.6694 (F)

COMM. UTILITY RELOCATION PLAN
4'X4'X4' VAULT

PLAN NO.	PROJECT	FILE NO.	SHEET NO.
			20(7)