LCSA
LOUDOUN COUNTY SANITATION AUTHORITY

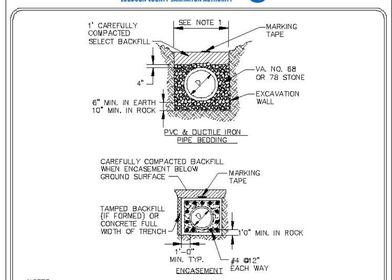

NOTES:
1. TRENCH WIDTH IN EARTH TO BE PIPE O.D.+12"
   TRENCH WIDTH IN ROCK TO BE PIPE O.D.+48"
2. ENCASEMENT:
   A. BEGIN AND END ENCASEMENT AT PIPE JOINT.
   B. CONCRETE TO BE LCSA CLASS B (3000 PSI).
   C. BUOYANCY CALCULATIONS REQUIRED FOR PIPES LARGER THAN 12" OR IF ENCASEMENT IS TO BE LONGER THAN 60'.
3. REQUIREMENTS FOR PIPE 30 IN. DIAMETER AND GREATER SHALL BE ON A JOB SPECIFIC BASIS.
4. REFER TO APPROVED PRODUCTS LIST FOR ADDITIONAL REQUIREMENTS

01/12/06	PIPE BEDDING AND ENCASEMENT	G1

..\Desktop\LCSA_G1.dwg 1/12/2006 2:41:29 PM

LCSA
LOUDOUN COUNTY SANITATION AUTHORITY

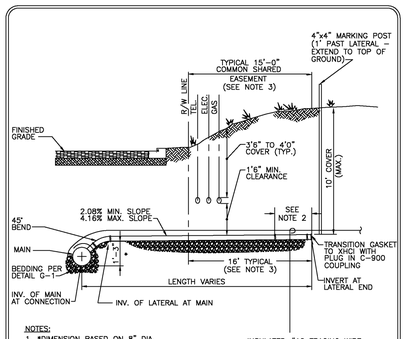

NOTES:
1. *DIMENSION BASED ON 8" DIA. SANITARY SEWER PIPE.
2. COUPLING/ TRANSITION GASKET TO BE MINIMUM 5' FROM LAST PIPE JOINT.
3. DIMENSIONS APPLY IN PUBLIC RIGHT-OF-WAYS.
4. REFER TO APPROVED PRODUCTS LIST FOR ADDITIONAL REQUIREMENTS.

INSULATED #12 TRACING WIRE – LOOPED AROUND MAIN – CONTINUOUS TO CLEANOUT. MAKE SPLICES WITH BUTT CONNECTORS AND SHRINK SLEEVES. △

06/02/02 △ 07/22/02	SANITARY LATERAL	S1

LCSA
LOUDOUN COUNTY SANITATION AUTHORITY

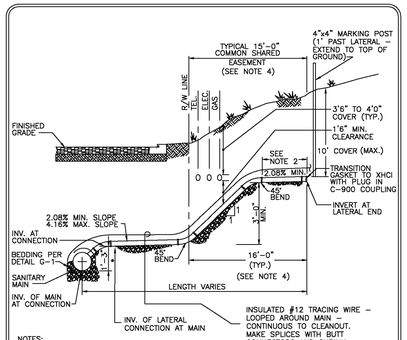

NOTES:
1. *DIMENSION BASED ON 8" DIA. SANITARY SEWER PIPE.
2. COUPLING/ TRANSITION GASKET TO BE MINIMUM 5' FROM LAST PIPE JOINT.
3. DIMENSIONS APPLY IN PUBLIC RIGHT-OF-WAYS.
4. REFER TO APPROVED PRODUCTS LIST FOR ADDITIONAL REQUIREMENTS.

INSULATED #12 TRACING WIRE – LOOPED AROUND MAIN – CONTINUOUS TO CLEANOUT. MAKE SPLICES WITH BUTT CONNECTORS AND SHRINK SLEEVES. △

06/02/02 △ 07/22/02	SANITARY LATERAL WITH VERTICAL BENDS	S2

LCSA
LOUDOUN COUNTY SANITATION AUTHORITY

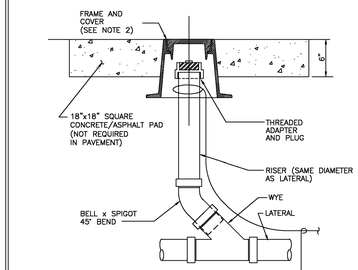

NOTES:
1. APPLICABLE WHERE CLEAN-OUT IS BENEATH LIGHT VEHICULAR TRAFFIC.
2. REFER TO APPROVED PRODUCTS LIST FOR ADDITIONAL REQUIREMENTS.

INSULATED #12 TRACING WIRE – LOOPED AROUND TOP OF RISER – CONTINUOUS TO CLEANOUT. MAKE SPLICES WITH BUTT CONNECTORS AND SHRINK SLEEVES. △

06/02/02 △ 07/22/02	SANITARY CLEAN-OUT	S3

LCSA
LOUDOUN COUNTY SANITATION AUTHORITY

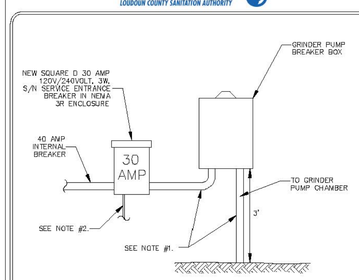

NOTES:
1. 4 – #10 THWN – 1" C. PVC CONDUIT TO PUMP SUB PANEL (TYPE "A") OR
   4 – #10 UF – 3/4" C. PVC CONDUIT TO PUMP SUB PANEL (TYPE "B").
2. NEW #6 AWG. SUPPLEMENTARY GROUND CONDUCTOR TO NEW 3/4" X 10'-0" GROUND ROD.
3. ELECTRIC TO MEET ALL LOCAL CODES. OWNER TO OBTAIN ELECTRICAL PERMIT. DEDICATED CIRCUIT REQUIRED.
4. REFER TO APPROVED PRODUCTS LIST FOR ADDITIONAL REQUIREMENTS.

03/27/06	GRINDER PUMP ELECTRICAL SUPPLY	S4A

LCSA
LOUDOUN COUNTY SANITATION AUTHORITY

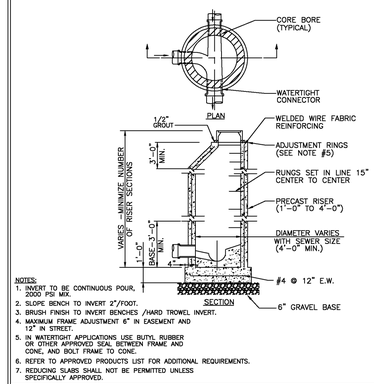

NOTES:
1. INVERT TO BE CONTINUOUS POUR, 2000 PSI MIX.
2. SLOPE BENCH TO INVERT 2"/FOOT.
3. BRUSH FINISH TO INVERT BENCHES /HARD TROWEL INVERT.
4. MAXIMUM FRAME ADJUSTMENT 6" IN EASEMENT AND 12" IN STREET.
5. IN WATERTIGHT APPLICATIONS USE BUTYL RUBBER OR OTHER APPROVED SEAL BETWEEN FRAME AND CONE, AND BOLT FRAME TO CONE.
6. REFER TO APPROVED PRODUCTS LIST FOR ADDITIONAL REQUIREMENTS.
7. REDUCING SLABS SHALL NOT BE PERMITTED UNLESS SPECIFICALLY APPROVED.

06/02/02	STANDARD PRECAST MANHOLE	S5

LCSA
LOUDOUN COUNTY SANITATION AUTHORITY

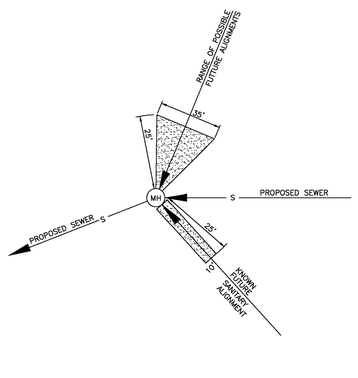

06/02/02	ADVANCED BLAST	S9

STANDARD NOTES:

1. ALL WATER MAINS AND SANITARY SEWERS MUST BE CONSTRUCTED IN ACCORDANCE. WITH THE CURRENT TOWN OF PURCELLVILLE STANDARDS AND SPECIFICATIONS.
2. NO BLASTING IS PERMITTED WITHIN 25' OF EXISTING TOWN OF PURCELLVILLE UTILITIES.
3. WATER SERVICES MUST MAINTAIN A MINIMUM 6' HORIZONTAL SEPARATION FROM SANITARY LATERALS.
4. ALL TOWN OF PURCELLVILLE SANITARY AND WATER MAIN EASEMENTS MUST BE 15', UNLESS OTHERWISE NOTED.
5. SANITARY SEWERS AND WATER MAINS TRAVERSING LOT LINES MUST MAINTAIN A MINIMUM 15' HORIZONTAL SEPARATION FROM PROPOSED OR EXISTING BUILDINGS. UNLESS PRIOR PERMISSION IS GRANTED BY TOWN OF PURCELLVILLE.
6. ALL HYDRANTS AND METER CROCKS MUST MAINTAIN 5' HORIZONTAL SEPARATION FROM EDGE OF DRIVEWAY APRONS.
7. WATER MAINS MUST MAINTAIN A MINIMUM 5' HORIZONTAL SEPARATION FROM EDGE OF GUTTER PAN, EXCEPT AT DESIGNATED CROSSINGS.
8. LANDSCAPING IS NOT PERMITTED WITHIN TOWN OF PURCELLVILLE EASEMENTS, OR WITHIN 5' OF FIRE HYDRANT AND WATER METER CROCK LOCATIONS.
9. ALL WATER MAINS MUST BE CLASS 52 DUCTILE IRON PIPE, UNLESS OTHERWISE NOTED.
10. A 2" DETECTABLE MARKING TAPE MUST BE PLACED ABOVE ALL WATER MAINS OUTSIDE OF PAVEMENT.
11. ALL SANITARY SEWERS MUST BE PVC DR-25 PER AWWA C-900, UNLESS OTHERWISE NOTED.
12. ALL SANITARY SEWER LATERALS MUST BE 4" PVC AT 2.08% SLOPE UNLESS OTHERWISE NOTED AND MUST ENTER THE MAIN AT 90 DEGREES.
13. A 2" DETECTABLE MARKING TAPE MUST BE PLACED ABOVE ALL PVC SANITARY SEWERS.
14. PROVIDE POSITIVE DRAINAGE FOR SANITARY MANHOLES LOCATED OUTSIDE OF PAVEMENT AREAS.
15. TOP OF MANHOLES LOCATED OUTSIDE OF PAVEMENT AREAS MUST BE 1' ABOVE FINISHED GRADE. THIS REQUIREMENT SHALL NOT APPLY IN DEVELOPED LAWNS.

HUGHES GROUP ARCHITECTS
45640 WILLOW POND PLAZA
STERLING, VIRGINIA 20164
703.437.6600

CIVIL:
ALPHA CORPORATION
21351 Ridgetop Circle, Suite 200
Dulles, Va 20166
(703) 450-0800

STRUCTURAL:
EHLERT-BRYAN
1451 Dolley Madison Blvd. Suite 220
McLean, VA 22101
(703) 827-9552

MECHANICAL/ELECTRICAL:
BRINJAC ENGINEERING
4000 Albermarle Street, NW
Washington, DC 20016
(202) 237-2750

PURCELLVILLE FIRE AND RESCUE

500 NORTH MAPLE AVENUE
PURCELLVILLE, VIRGINIA

TOWN OF PURCELLVILLE SANITARY DETAILS

KEY PLAN

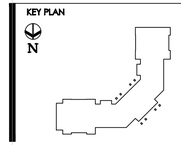

REVISIONS:

ISSUES:
09-26-07 BID SET

STAMP AND SEAL:

DATE: 09-26-07
SCALE: AS NOTED
PROJECT NO. 0611
SHEET: C-137