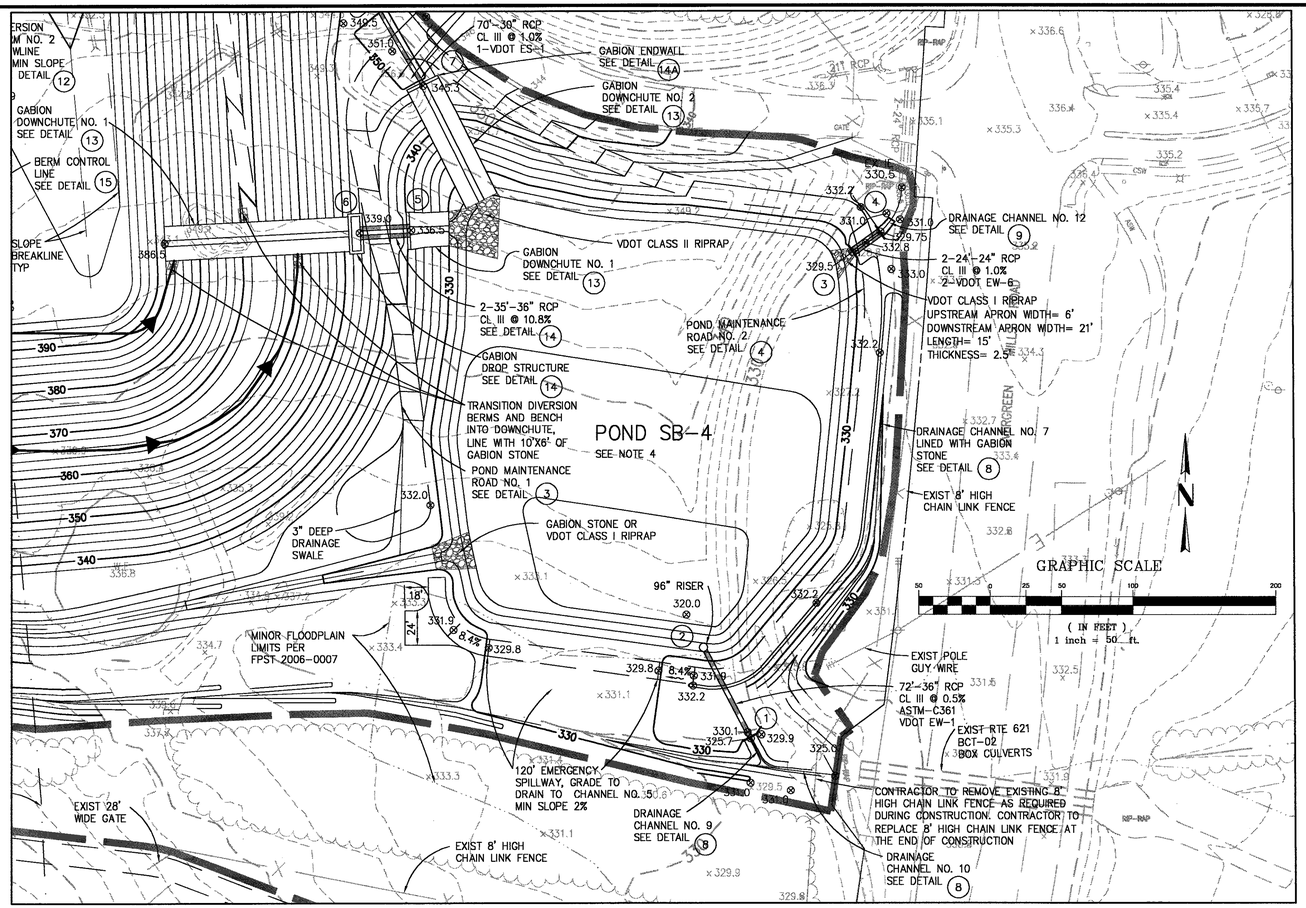

NOTES:

1. TOPOGRAPHIC MAP PREPARED BY AIR SURVEY CORPORATION, DULLES, VIRGINIA USING PHOTOGRAMMETRIC METHODS FROM AERIAL PHOTOGRAPHY DATED SEPTEMBER 30, 2007.
2. NAD 1983 AND NAVD 1988.
3. ALL GRADES TO BE A MINIMUM SLOPE OF 2% AND A MAXIMUM SLOPE OF 3:1 UNLESS OTHERWISE SPECIFICALLY APPROVED BY THE ENGINEER OR NOTED.
4. SB-4 TO BE CLEANED OUT AND REGRADED TO DESIGN GRADES AT THE END OF THE PROJECT.

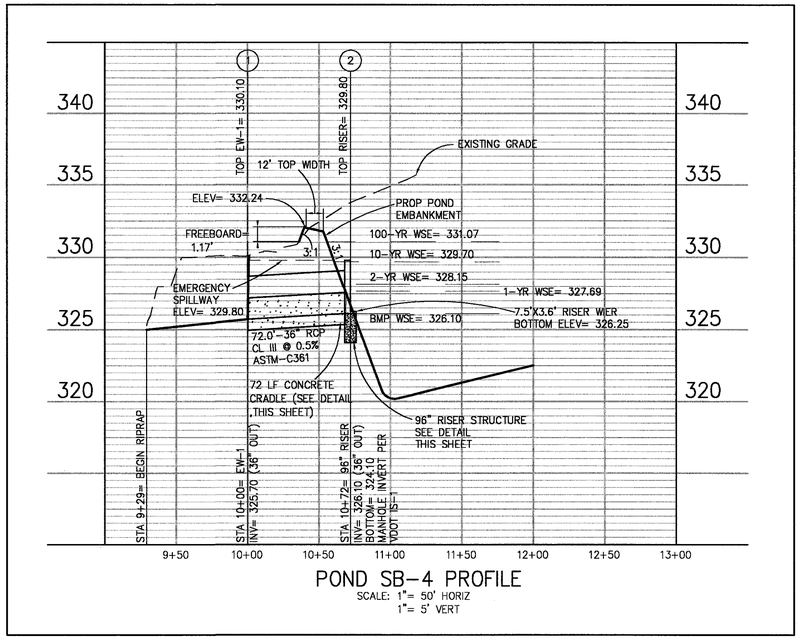

POND SB-4 PROFILE

SCALE: 1"= 50' HORIZ
1"= 5' VERT

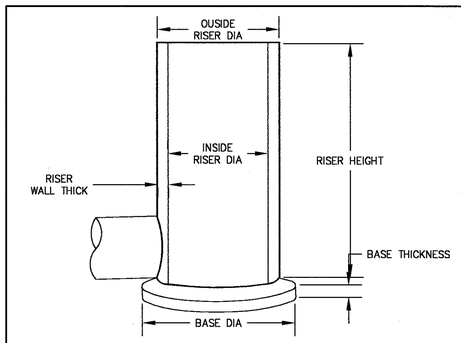

OUTFALL STRUCTURE SCHEMATIC

(NOT TO SCALE)

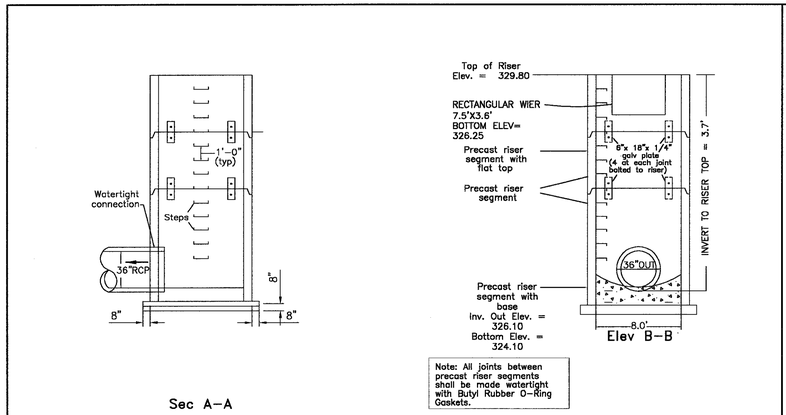

Note: All joints between precast riser segments shall be made watertight with Butyl Rubber O-Ring Gaskets.

RISER STRUCTURE DETAIL

(NOT TO SCALE)

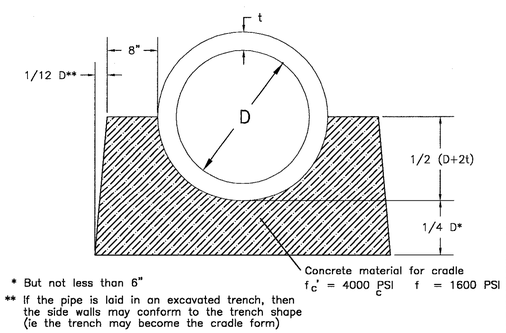

* But not less than 6"

** If the pipe is laid in an excavated trench, then the side walls may conform to the trench shape (ie the trench may become the cradle form)

CONCRETE CRADLE DETAIL

(NOT TO SCALE)

POND: BUOYANCY CALCULATIONS - SWM BMP CONTROL RISER

RISER INSIDE DIA=	8.00 FT	(Rd)
RISER WALL THICK=	0.67 FT	(Rw)
RISER OUTSIDE DIA=	9.33 FT	(RD)
RISER HEIGHT =	5.70 FT	(Rh)
BASE DIAMETER=	10.67 FT	(Bd)
BASE THICKNESS=	0.67 FT	(Bt)

*Weight of soil over exterior base footing and trash rack is omitted.

VOLUME OF CONCRETE IN BASE (Vb) =
Pi * (Bd^2)/4 *Bt = 59.95 CF

VOLUME OF CONCRETE IN RISER (Vr) =
[(Pi * (RD^2)/4) - (Pi * (Rd^2)/4)] * Rh = 103.46 CF

WEIGHT OF CONCRETE RISER & BASE =
(Vb + Vr - Vs) * 220lb/CF = 35,950 lbs.

WATER VOLUME DISPLACED BY RISER (Vd) =
Pi * (RD^2)/4 *Rh = 389.98 CF

BUOYANT FORCE (BF) = Vd * 62.4lb/CF = 24,335 lbs.

FACTOR OF SAFETY= 1.48

RISER BUOYANCY CALCULATIONS

SWS
11706 BOWMAN GREEN DRIVE RESTON, VIRGINIA 20190
PHONE (703) 834-0101
FAX: (703) 834-0181

REUSE OF DOCUMENTS
THIS DOCUMENT, AND THE IDEAS AND DESIGNS INCORPORATED HEREIN, AS AN INSTRUMENT OF PROFESSIONAL SERVICE, IS THE PROPERTY OF SOLID WASTE SERVICES, LLC. AND THE COUNTY OF LOUDOUN, VIRGINIA AND IS NOT TO BE REPRODUCED OR USED, IN WHOLE OR IN PART FOR ANY OTHER PROJECT WITHOUT THE WRITTEN AUTHORIZATION OF SOLID WASTE SERVICES, LLC OR THE COUNTY OF LOUDOUN, VIRGINIA
© SOLID WASTE SERVICES, LLC

POND SB-4 PLAN AND PROFILE

WOODS ROAD DISPOSAL UNIT PRIMARY INFRASTRUCTURE

LOUDOUN COUNTY, VIRGINIA

PLAN STATUS	
DATE	DESCRIPTION
GA DESIGN	GA DRAWN / FA CHKD
SCALE	H: V: SEE SHEET
DATE 01/22/08	