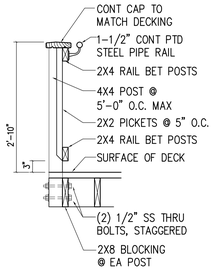

1 A9 HANDRAIL DETAIL
3/4"=1'-0"

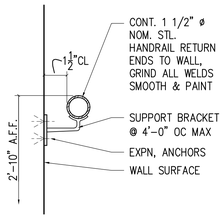

2 A9 HANDRAIL DETAIL
3"=1'-0"

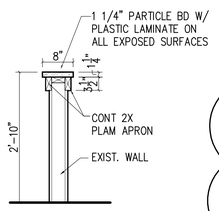

3 A9 COUNTER DETAIL
3/4"=1'-0"

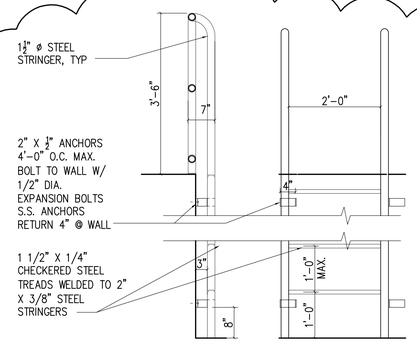

4 A9 LADDER DETAIL
3/4"=1'-0"
N.I.C.

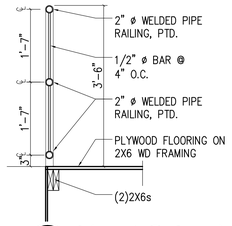

8 A9 RAILING DETAIL
3/4"=1'-0"
N.I.C.

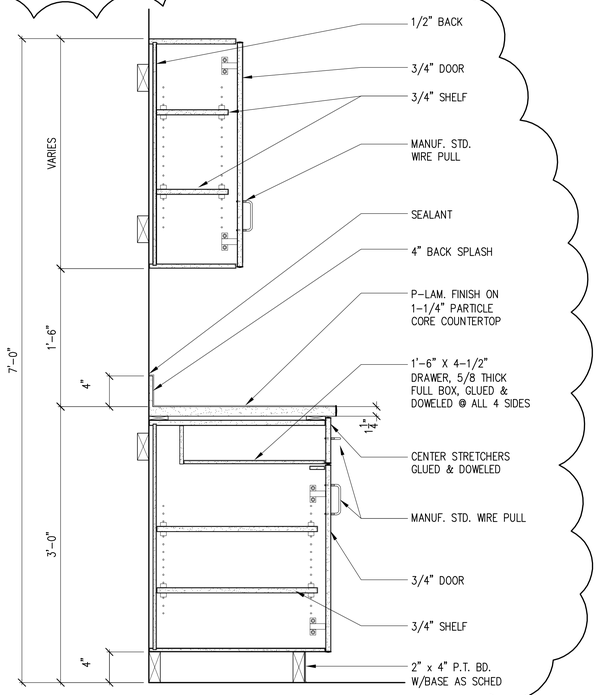

5 A9 CABINET DETAILS
1 1/2"=1'-0"
N.I.C.

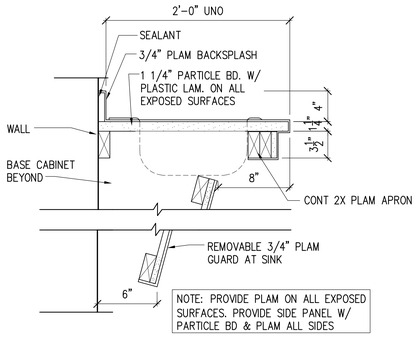

6 A9 SINK BASE CABINET DETAIL
1 1/2"=1'-0"

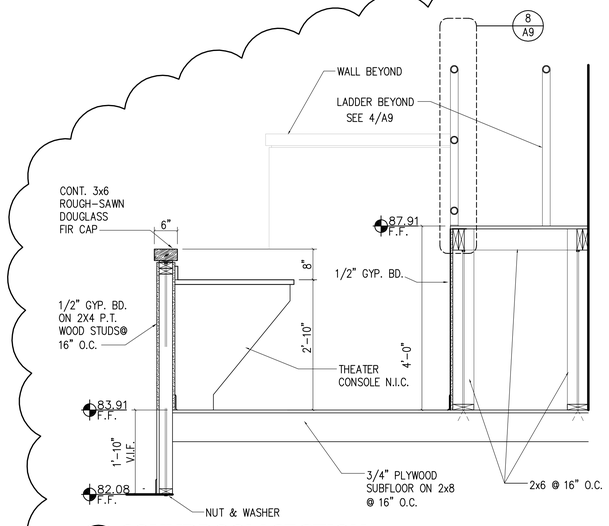

7 A9 SOUNDROOM SECTION
3/4"=1'-0"
N.I.C.

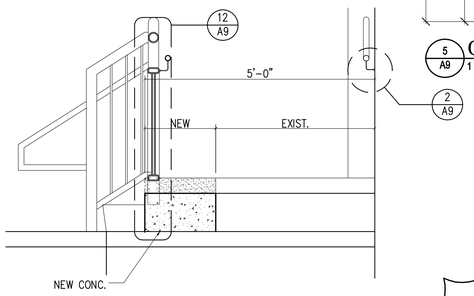

9 A9 RAMP DETAIL
3/4"=1'-0"
N.I.C.

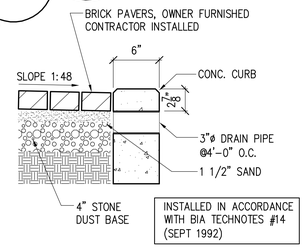

13 A9 CONCRETE CURB DETAIL
1 1/2"=1'-0"

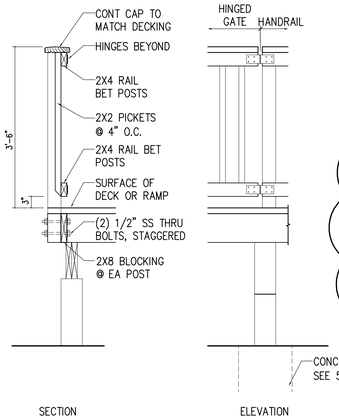

10 A9 HINGED GATE
1/2"=1'-0"

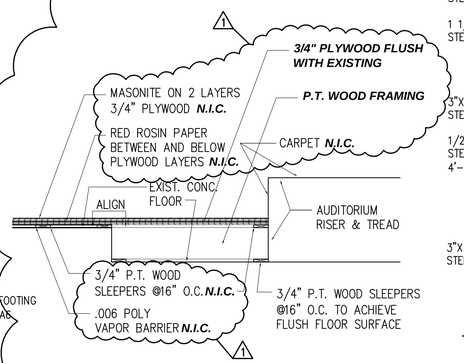

11 A9 STAGE INFILL

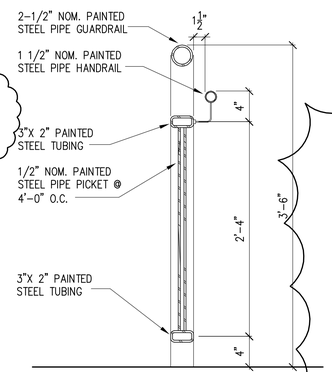

12 A9 HANDRAIL DETAIL
1 1/2"=1'-0"
N.I.C.

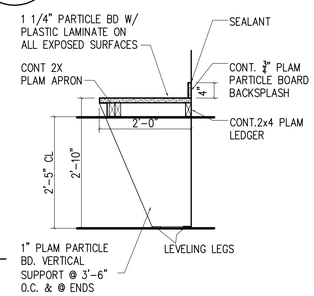

14 A9 COUNTER DETAIL
3/4"=1'-0"

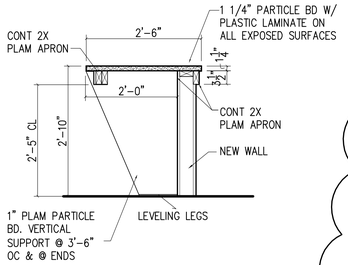

15 A9 COUNTER DETAIL
3/4"=1'-0"

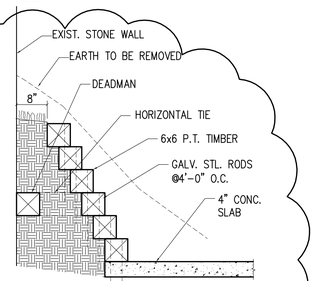

16 A9 TIMBER RETAINING WALL DETAIL
3/4"=1'-0"
N.I.C.

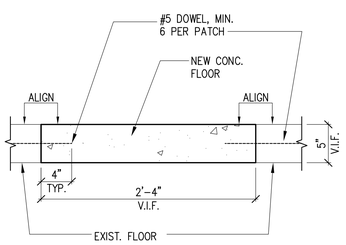

17 A9 SLAB INFILL
1 1/2"=1'-0"

Samaha Associates P.C. architects

9990 Lee Highway Suite 350 Fairfax, VA 22030
Phone 703-691-3311 Fax 703-691-3316

Franklin Park Performing And Visual Arts Center

Department of Parks, Recreation & Community Services
Loudoun County Virginia

1 REBID REVISIONS– 4/14/06
2 REBID ADDENDUM #1– 7/17/06

Key plan

Sheet Title:

Miscellaneous Details

Drawing Number. Of __

A9

Issue Date: 4/14/2006

Drawn By: TRS
Checked By: SSS
Project Number: 125200.3