EXHAUST FAN
GREENHECK MODEL CW-090-D, 467 CFM @ 0.25 IN. WG. STATIC PRESSURE, LWA =57, dBA = 48, SONES = 5. FAN TO INCLUDE: BIRD SCREEN, 10"X10" GRAVITY DAMPER MODEL WD-323-PB, TEFC MOTOR, ALUMINUM HOUSING AND WHEEL WITH HI-PRO POLYESTER COATING.

THERMOSTAT
LINE VOLTAGE SNAP TYPE SET FOR 90' F.

INLET LOUVER
GREEN HECK MODEL E9D-403 WITH GUTTER DRAINS, BIRD SCREEN AND MILL FINISH. SIZE AS NOTED.

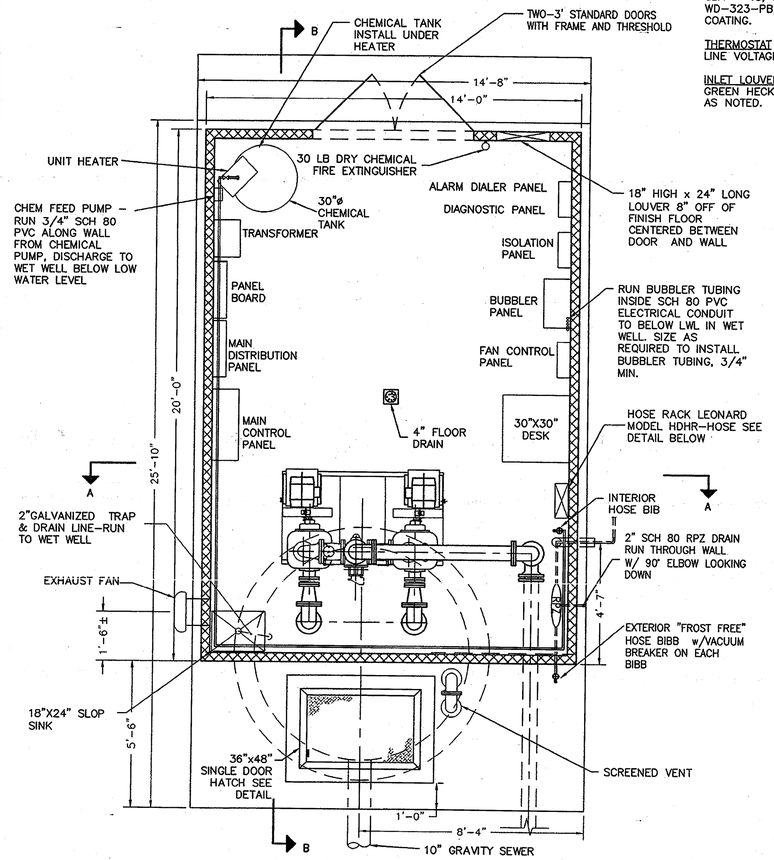

PUMP STATION LAYOUT
SCALE: 3/8" = 1'-0"

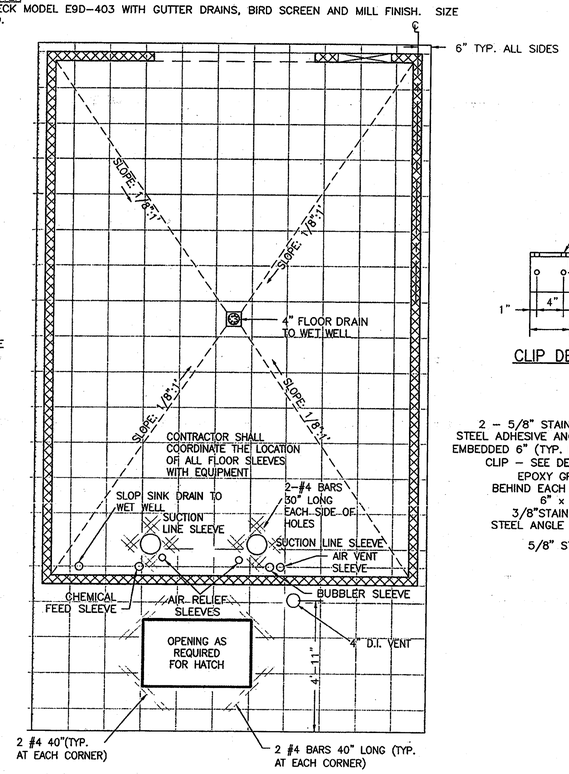

PUMP STATION LAYOUT
SCALE: 3/8" = 1'-0"

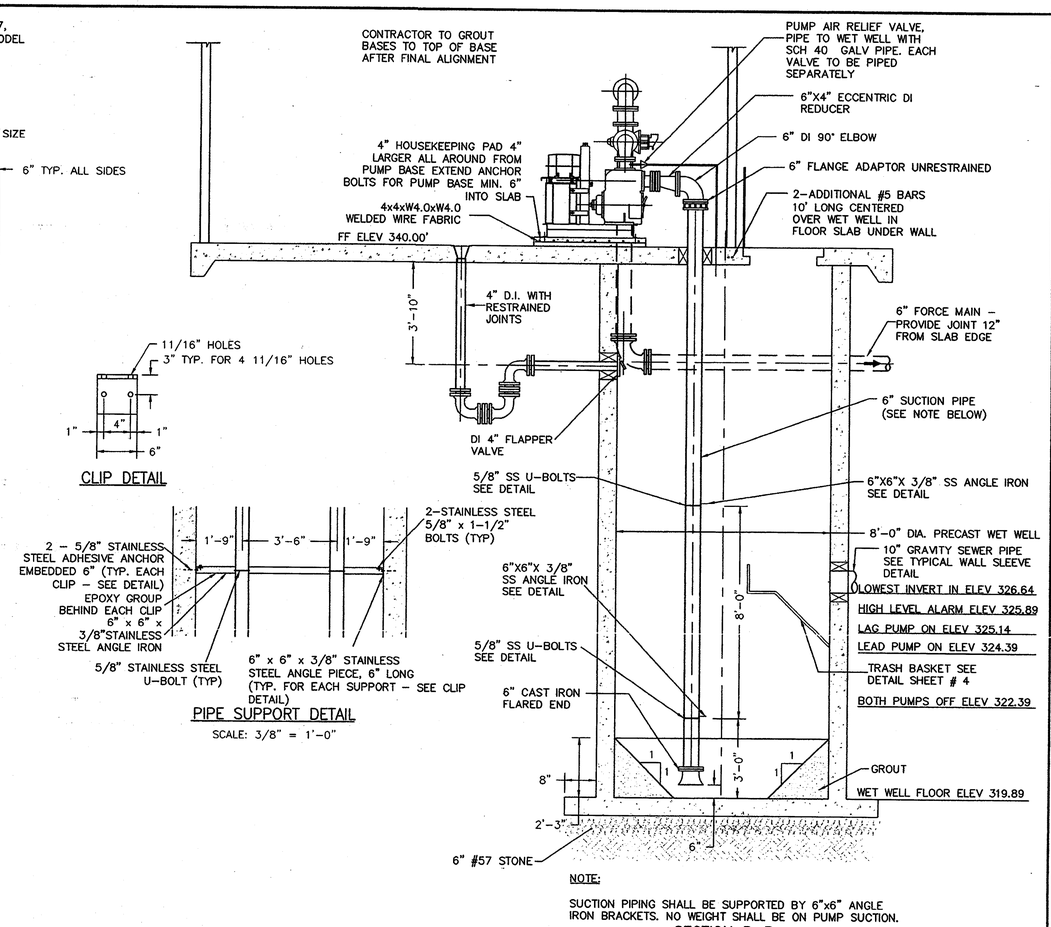

NOTE:

SUCTION PIPING SHALL BE SUPPORTED BY 6"x6" ANGLE IRON BRACKETS. NO WEIGHT SHALL BE ON PUMP SUCTION.

SECTION B-B
SCALE: 3/8" = 1'-0"

HDHR-HOSE

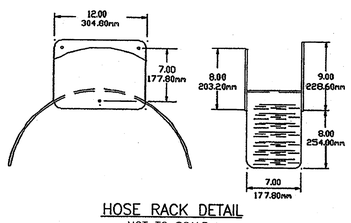

HOSE RACK DETAIL
NOT TO SCALE

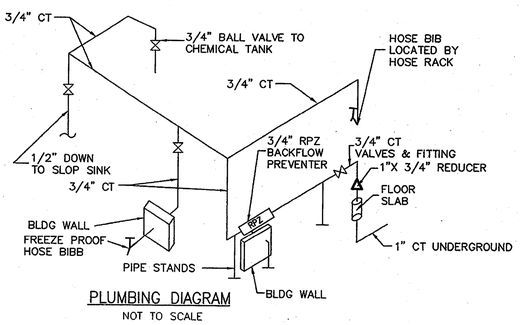

PLUMBING DIAGRAM
NOT TO SCALE

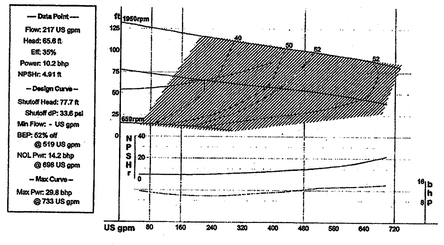

PUMP CURVE
NOT TO SCALE

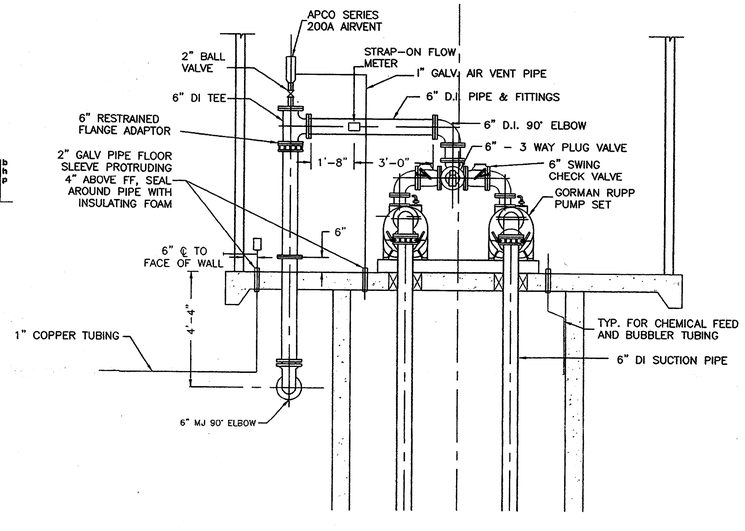

SECTION A-A
SCALE: 3/8" = 1'-0"

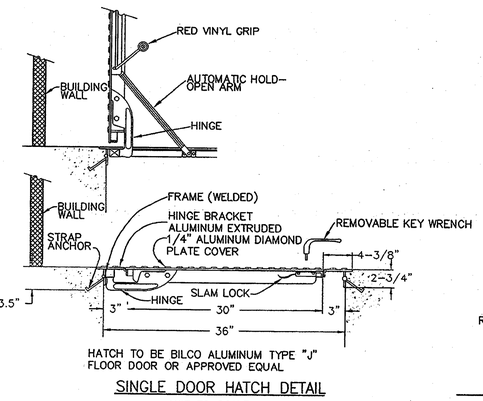

SINGLE DOOR HATCH DETAIL
NOT TO SCALE

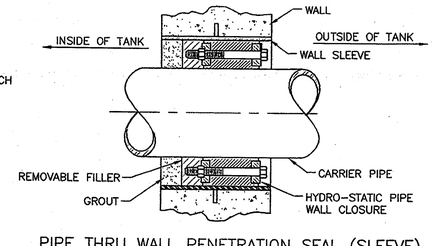

PIPE THRU WALL PENETRATION SEAL (SLEEVE)
NOT TO SCALE

P127
T6-0803

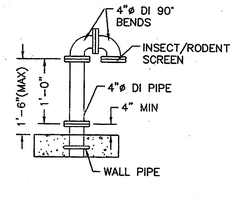

SCREENED DI VENT
NOT TO SCALE

BID

COMMONWEALTH OF VIRGINIA
ALFRED R. WILLIAMS
No. 032037
11/29/04
PROFESSIONAL ENGINEER

VIRGINIA | NORTH CAROLINA | WEST VIRGINIA
THIS DRAWING PREPARED AT THE
CORPORATE OFFICE
711 N. Courthouse Road | Richmond, VA 23236-4099
TEL 804.794.3500 FAX 804.794.7639 www.timmons.com

YOUR VISION ACHIEVED THROUGH OURS.

Site Development | Residential | Infrastructure | Technology

DATE	REVISION DESCRIPTION

DATE 11/29/04
DRAWN BY O.YERMOLAYEV
DESIGNED BY A. WILLIAMS
CHECKED BY
SCALE AS SHOWN

TIMMONS GROUP

LOUDOUN DGS PUMP STATION
LOUDOUN COUNTY, VA
PUMP STATION SECTION/DETAIL

JOB NO. 21831-201
SHEET NO. 6

These plans and associated documents are the exclusive property of TIMMONS GROUP and may not be reproduced in whole or in part and shall not be used for other projects or purposes, including, and for construction staking without the express written consent of TIMMONS GROUP.