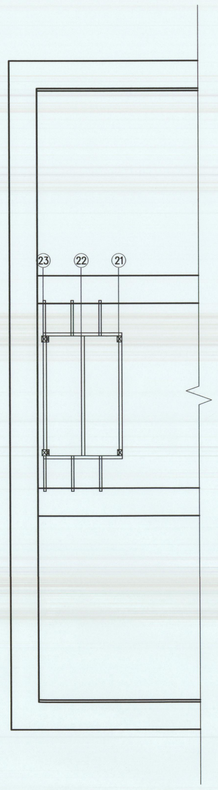

N

PULPIT FLOOR FRAMING PLAN
2 / S-1 1/4"=1'-0"

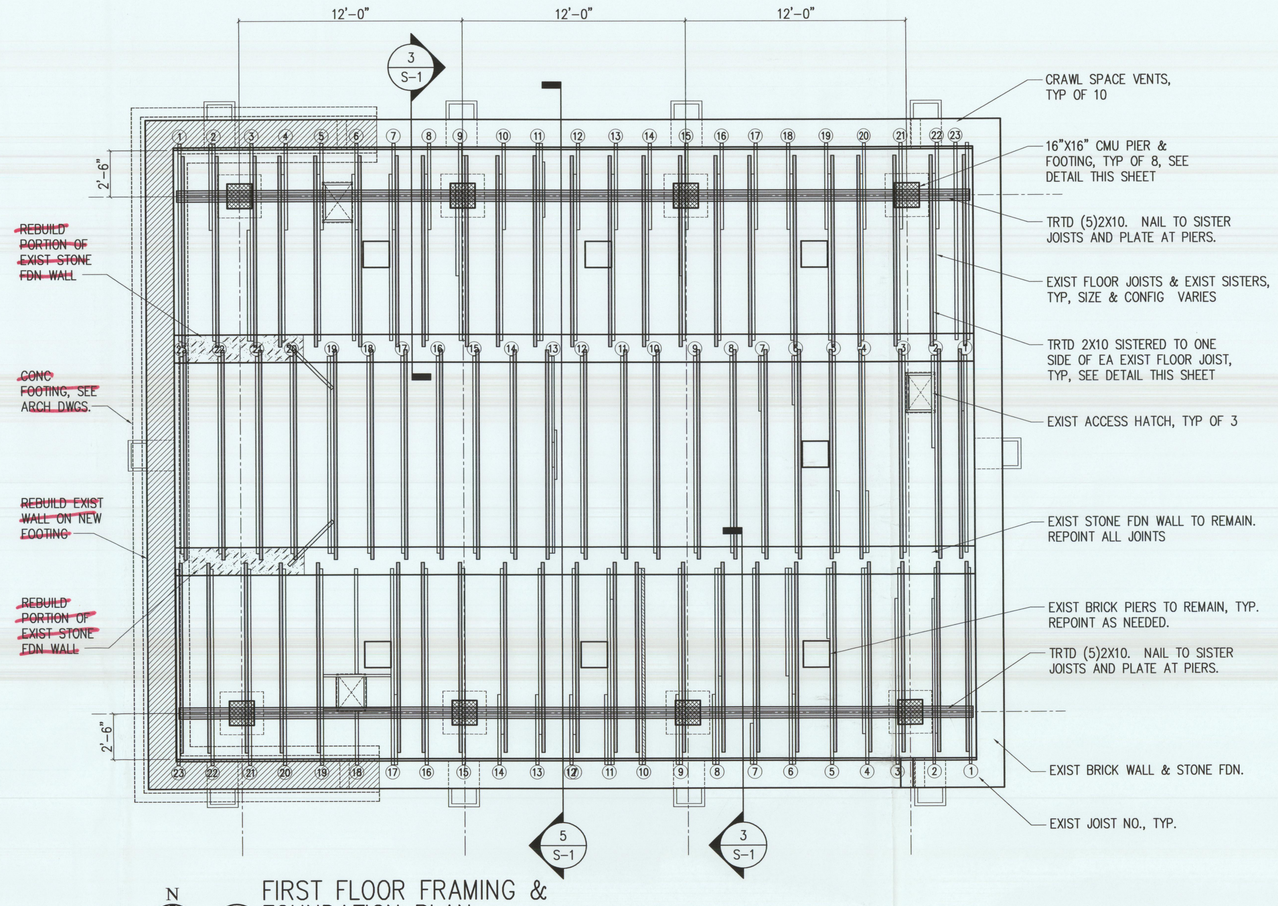

N

FIRST FLOOR FRAMING & FOUNDATION PLAN
1 / S-1 1/4"=1'-0"

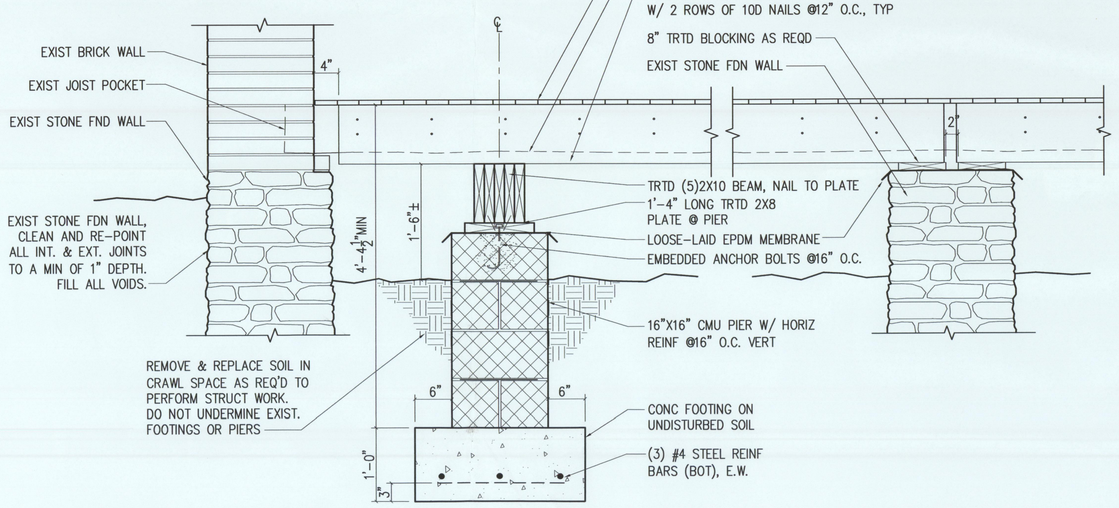

JOIST DETAIL
3 / S-1 1"=1'-0"

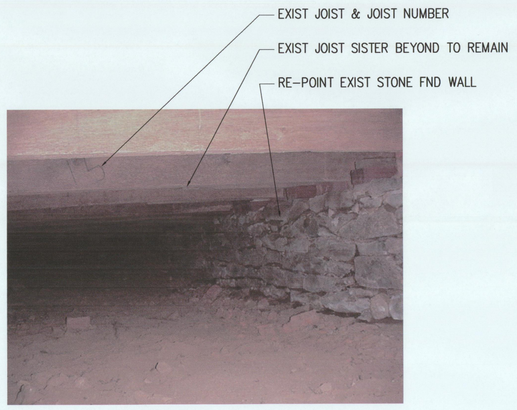

EXISTING CRAWL SPACE
4 / S-1 NO SCALE

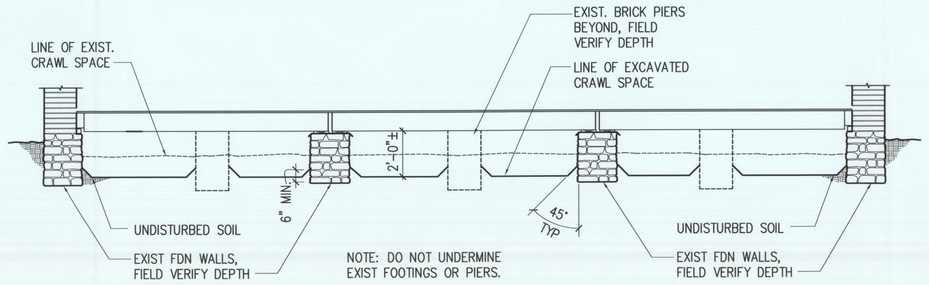

CRAWL SPACE EXCAVATION
5 / S-1 5/16"=1'-0"

GENERAL NOTES

A. WORK TO EXISTING FLOOR STRUCTURE AND INSTALLATION OF NEW FLOOR STRUCTURE AND FOOTINGS SHALL BE PERFORMED FROM BELOW EXISTING WOOD FLOORING. UNLESS INDICATED, PORTIONS OF EXISTING WOOD FLOORING OR FLOOR NAILS MAY NOT BE REMOVED WITHOUT PRIOR APPROVAL OF THE OWNER. NEW NAILS OR PENETRATIONS MAY NOT BE INSTALLED IN EXISTING WOOD FLOORING WITHOUT PRIOR APPROVAL OF THE OWNER.

B. ~~WHEN REMOVING EXIST. BRICK FROM WALLS CAREFULLY SEGREGATE ALL EXTERIOR FACE BRICK FROM OTHER INNER WALL BRICKS. REINSTALL ONLY EXTERIOR BRICKS ON EXTERIOR FACE.~~

C. DESIGN, PROVIDE, AND MAINTAIN TEMPORARY STRUCTURAL SUPPORTS FOR EXISTING WALLS, ROOF FRAMING, BALCONY FRAMING, AND FLOOR FRAMING AS REQUIRED TO FULLY SUPPORT EXISTING STRUCTURE DURING DEMOLITION AND CONSTRUCTION ACTIVITIES. TEMPORARY SUPPORTS SHALL PREVENT ANY MOVEMENT OF EXISTING STRUCTURE THAT WOULD DAMAGE EXISTING BUILDING FABRIC TO REMAIN. REMOVE TEMPORARY STRUCTURES ONLY AFTER ~~NEW~~ STRUCTURE IS COMPLETED AND ATTAINED SUFFICIENT STRENGTH. DESIGN AND PLACEMENT OF TEMPORARY STRUCTURES SHALL SUCH THAT THEY DO NOT DAMAGE EXISTING FINISHES OR BUILDING ITEMS TO REMAIN.

D. PRIOR TO PERFORMING WORK, IMMEDIATELY NOTIFY ARCHITECT OF ANY EXISTING CONDITIONS THAT WOULD ADVERSELY AFFECT STRUCTURAL INTEGRITY OF BUILDING DURING PERFORMANCE OF THE WORK.

Samaha Associates P.C. architects

COMMONWEALTH OF VIRGINIA
SEMON S. SAMAHA
(LICENSE) No. 2344
ARCHITECT

9990 Lee Highway Suite 350 Fairfax, VA 22030
Phone 703-691-3311 Fax 703-691-3316

Douglass C. Reed
Historic Structures Consultants

P.O. Box 185
Smithsburg, MD 21783
1-301-730-2699
douglasscreed@myactv.net

Mount ZION Church Restoration

Loudoun County Department of Parks, Recreation, and Community Services

Virginia State project # 0000

Sheet Title:

STRUCTURAL PLANS & DETAILS

Drawing Number. – Of

S-1

Issue Date: 4/24/05

Drawn By: TRS
Checked By: RAM
Project Number: 1184000