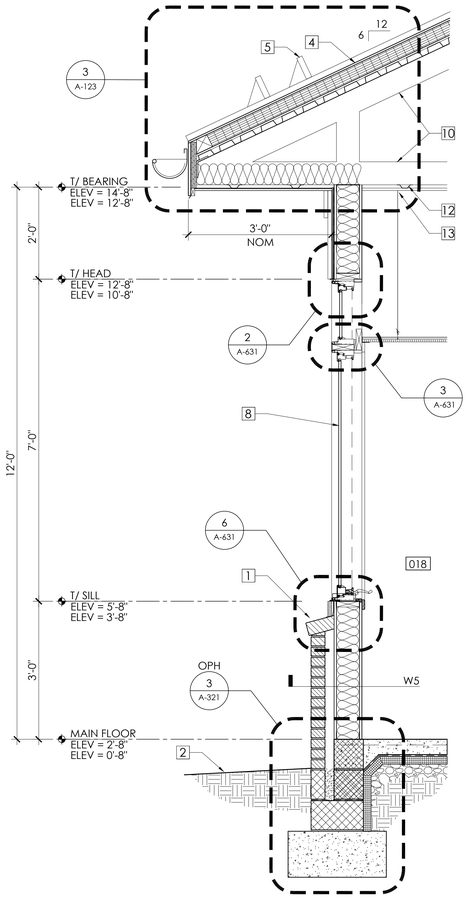

3
A-311

WALL SECTION

3/4" = 1'-0"

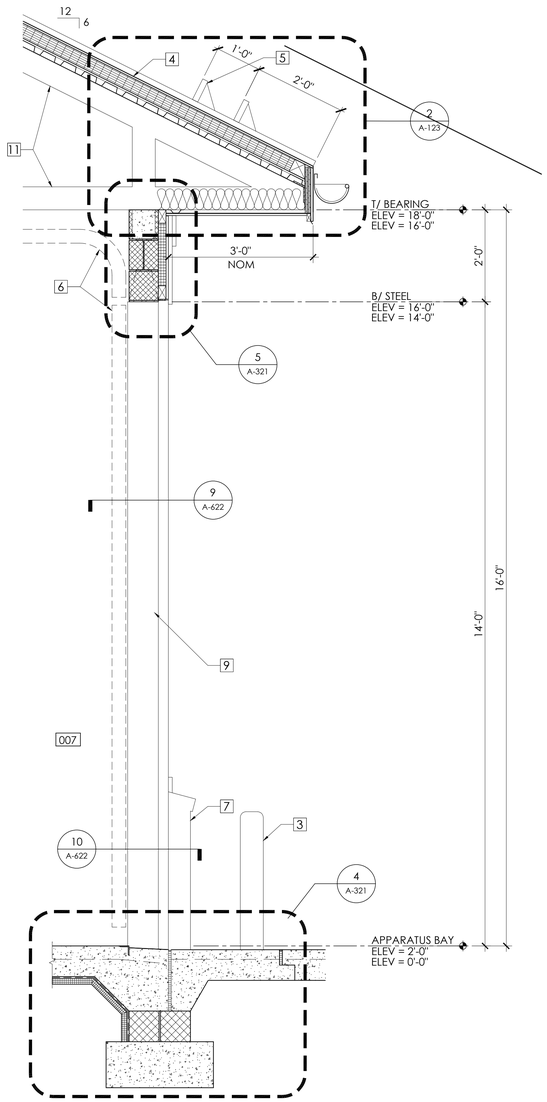

2
A-311

WALL SECTION

3/4" = 1'-0"

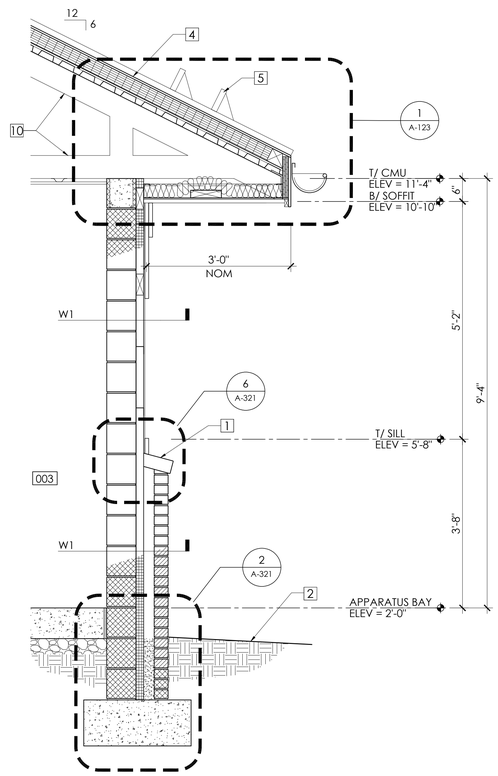

1
A-311

WALL SECTION

3/4" = 1'-0"

NOTES THIS DRAWING:

1. ROWLOCK SILL
2. FINISH GRADE - REFER TO CIVIL DRAWINGS
3. EXTERIOR BOLLARD - REFER TO DETAIL 9/A-061
4. TYPICAL STANDING SEAM METAL ROOF CONSTRUCTION - REFER TO DETAIL 1/A-121
5. SNOW GUARDS
6. SECTIONAL OVERHEAD DOOR AND TRACK
7. BRICK BEYOND
8. ALUM WOOD CLAD WINDOW - REFER TO DRAWING A-631
9. STEEL BENT PLATE BEYOND
10. LIGHT GAUGE METAL TRUSSES - REFER TO STRUCTURAL DRAWINGS
11. SPECIAL LH STEEL JOISTS - REFER TO STRUCTURAL DRAWINGS
12. 7/8" RESILIENT CHANNEL AT 12" OC - REFER TO DRAWING G-013
13. 5/8" FR GYPSUM BOARD

HUGHES GROUP ARCHITECTS
22630 DAVIS DRIVE, SUITE 175
STERLING, VIRGINIA 20164
703.437.6600

CIVIL:
ALPHA ENGINEERING
21351 Ridgetop Circle, Suite 200
Sterling, VA 20166
(703) 450-0800

STRUCTURAL:
EHLERT-BRYAN
1451 Dolley Madison Blvd. Suite 220
McLean, VA 22101
(703) 827-9552

MECHANICAL/ELECTRICAL:
BRINJAC ENGINEERING
4000 Albermarle Street, NW, Suite 305
Washington, DC 20016
(202) 237-2750

PURCELLVILLE FIRE AND RESCUE

500 MAPLE AVE, BUILDING #
PURCELLVILLE, VIRGINIA

WALL SECTIONS

KEY PLAN

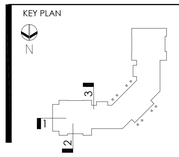

REVISIONS:

ISSUES:
9-26-07 BID SET

STAMP AND SEAL:

DATE: 9-26-07
SCALE: AS NOTED
PROJECT NO. 0611
SHEET: A-311

Copyright © 2007 by Hughes Group Architects