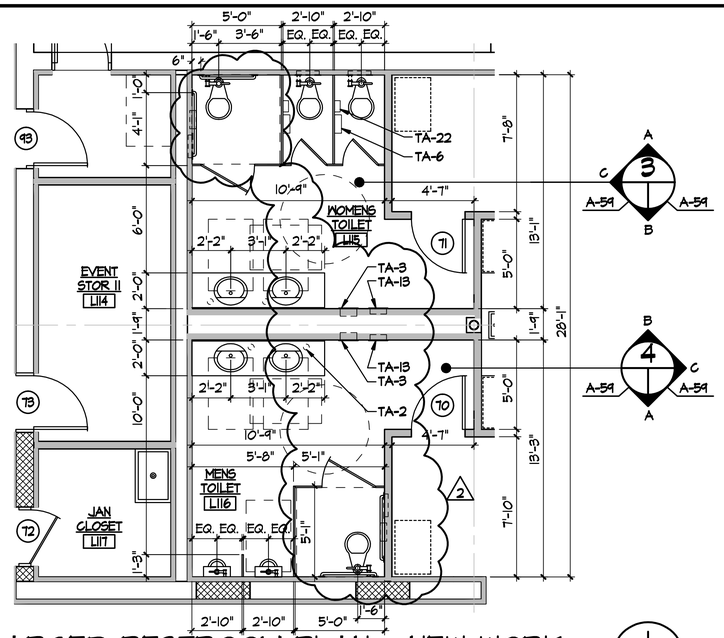

ENLARGED RESTROOM PLAN - NEW WORK

1/4"=1'-0"

1 | A-32 A-59

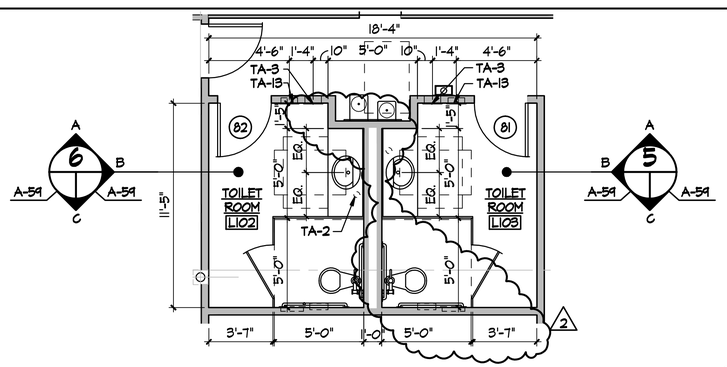

ENLARGED RESTROOM PLAN - NEW WORK

1/4"=1'-0"

2 | A-32 A-59

TOILET ACCESSORIES SCHEDULE

MARK	ITEM	MODEL NO. (BOBRICK)	COMMENTS
TA-1	STAINLESS STEEL MIRROR	B-1556 2436	FRAMELESS; TO RECEIVE TRIM
TA-2	SOAP DISPENSER	B-822	COUNTERTOP MOUNTED
TA-3	PAPER TOWEL DISP./WASTE RECPT.	B-3803	RECESSED
TA-4	FOLDING SHOWER SEAT	B-5181	
TA-5	TOILET TISSUE DISPENSER	B-6997	RECESSED
TA-6	TOILET TISSUE DISPENSER	B-69997	SURFACE-MOUNTED
TA-7	TOILET SEAT COVER DISPENSER	B-3013	RECESSED
TA-8	GRAB BAR	B-6806	42" LENGTH; W/ CONCEALED MOUNTING WITH SNAP FLANGE
TA-9	GRAB BAR	B-6806	36" LENGTH; W/ CONCEALED MOUNTING WITH SNAP FLANGE
TA-10	GRAB BAR	B-6806	18" LENGTH; W/ CONCEALED MOUNTING WITH SNAP FLANGE
TA-11	GRAB BAR	B-6806	12" LENGTH; W/ CONCEALED MOUNTING WITH SNAP FLANGE
~~TA-12~~	~~GRAB BAR~~	~~B-6806~~	~~40" LENGTH; W/ CONCEALED MOUNTING WITH SNAP FLANGE~~
TA-13	SANITARY NAPKIN DISPOSAL	B-35303	RECESSED
~~TA-14~~	~~PAPER TOWEL DISPENSER~~	~~B-526~~	~~COUNTERTOP MOUNTED~~
TA-14	DOUBLE ROBE HOOK	B-612	AT TOILET STALL DRS (INTERIOR OF STALL); INTERIOR OF DR TO ADA RR
TA-15	FOLD-DOWN PURSE SHELF	B-287	@ INTERIOR OF STALL
TA-16	VINYL SHOWER CURTAIN	204-3	
	SHOWER CURTAIN HOOKS	204-1	
TA-18	SHOWER CURTAIN ROD	B-6107	
TA-19	UNDERLAVATORY GUARDS	105 E-Z	BASIS-OF-DESIGN MANUF: TRUEBRO
TA-20	UTILITY SHELF	B-239	SURFACED-MOUNTED
~~TA-22~~	SANITARY NAPKIN DISPOSAL	B-270	SURFACED-MOUNTED

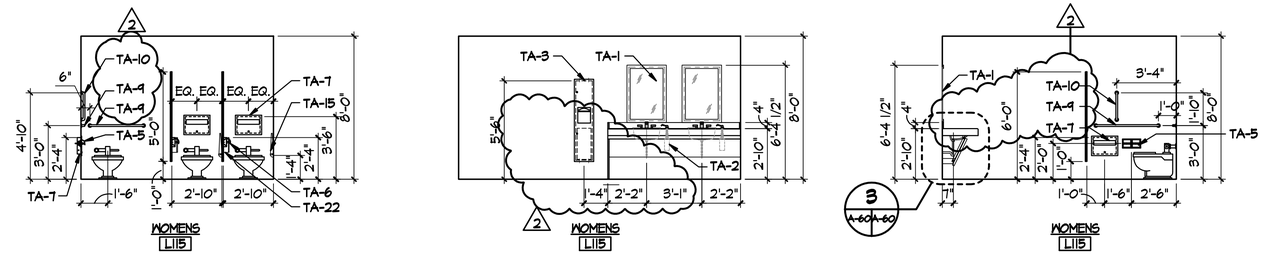

RESTROOM ELEVATION - NEW WORK

1/4"=1'-0"

3 | A-59 A-59

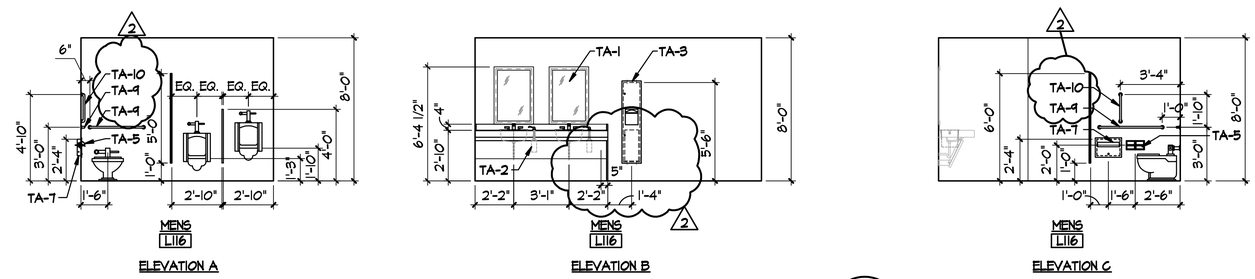

RESTROOM ELEVATION - NEW WORK

1/4"=1'-0"

4 | A-59 A-59

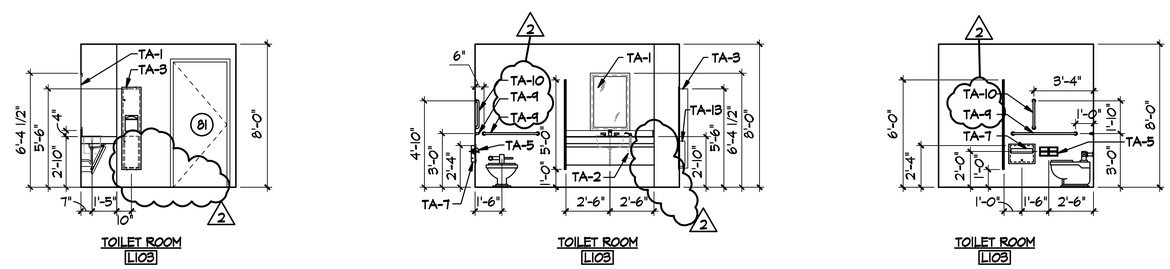

RESTROOM ELEVATION - NEW WORK

1/4"=1'-0"

5 | A-59 A-59

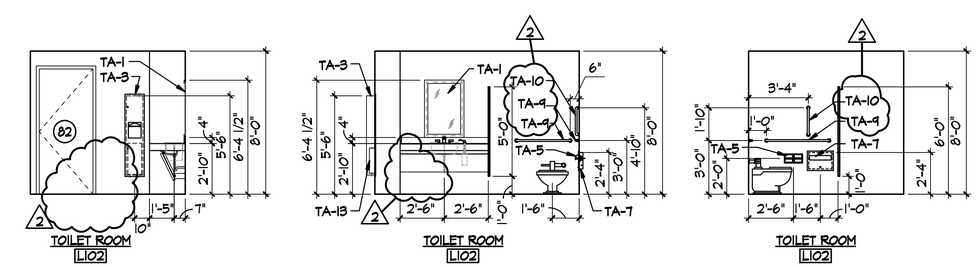

RESTROOM ELEVATION - NEW WORK

1/4"=1'-0"

6 | A-59 A-59

REFERENCE NOTES:

1. REFER TO CS-01 FOR PROJECT GENERAL NOTES.

2. REFER TO SHEET A-31 FOR NEW WORK FLOOR PLAN OF GROUND FLOOR - PART B AND TO SHEET A-32 FOR NEW WORK FLOOR PLAN - LOWER LEVEL.

GRAPHIC SCALE:

2' 0 4' 8'

1/4" = 1'-0"

Loc.	Description	Date	App.
2	ADDENDUM 2		
	09-23-2009		

Prj. Arch.	PECK PECK AND ASSOC
Prj. Eng.	
Drawn	AP/RV/SF
Scale	AS NOTED
Checked	DKP/GPP
Issued	08-24-09
App.	

Project Title:
NORTH STREET BUILDING RENOVATION
102 NORTH STREET LEESBURG, VIRGINIA
BID SUBMITTAL
County Building No.: 6277

COUNTY OF LOUDOUN

Project Management By:

PECK • PECK & ASSOCIATES, INC.
architecture planning graphics interiors
2050 OLD BRIDGE ROAD, WOODBRIDGE, VA 22192
(703) 690-3121 FAX (703) 690-1768

Sheet Contents:
RESTROOMS - ENLARGED PLANS AND DETAILS - NEW WORK

Drawing No.:
A-59