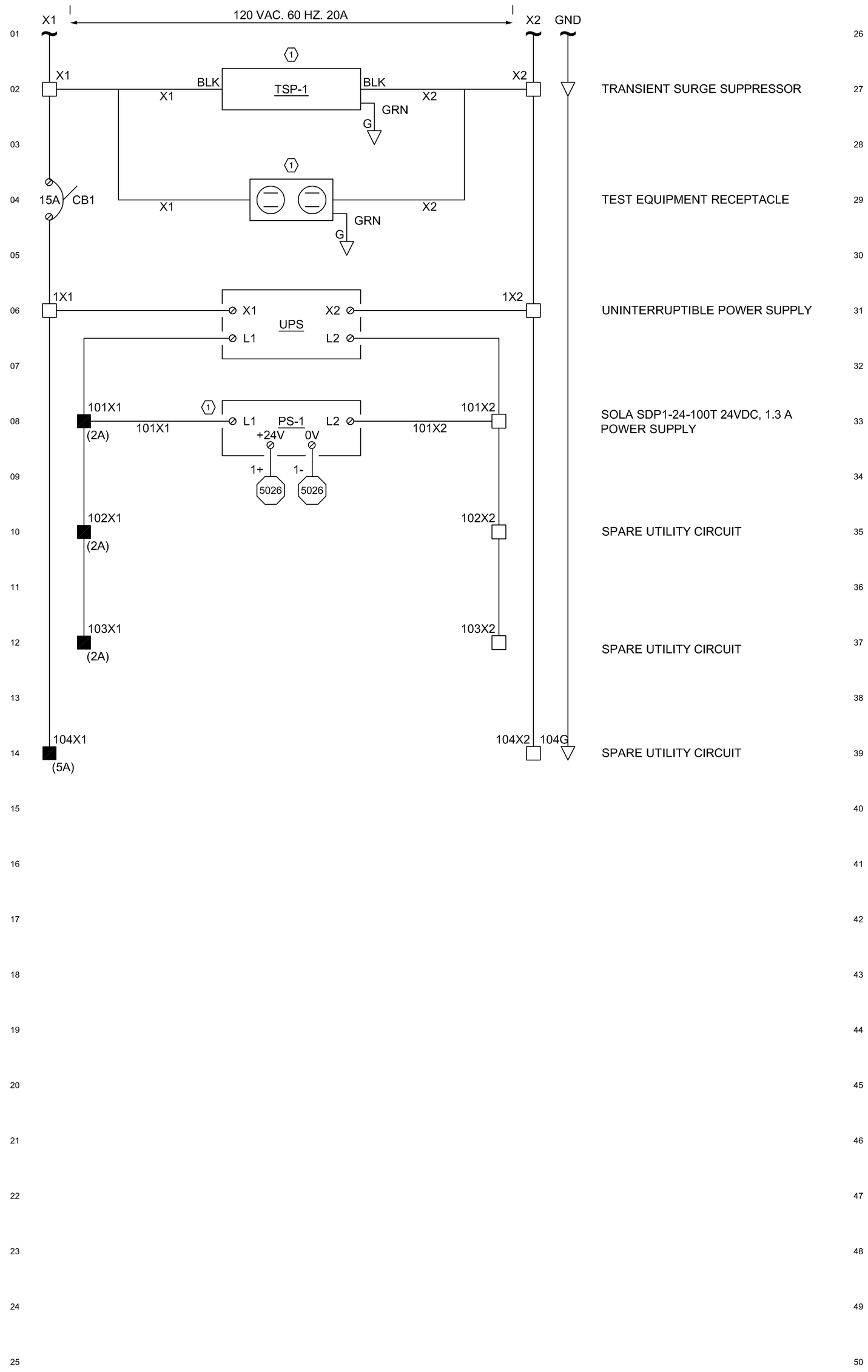


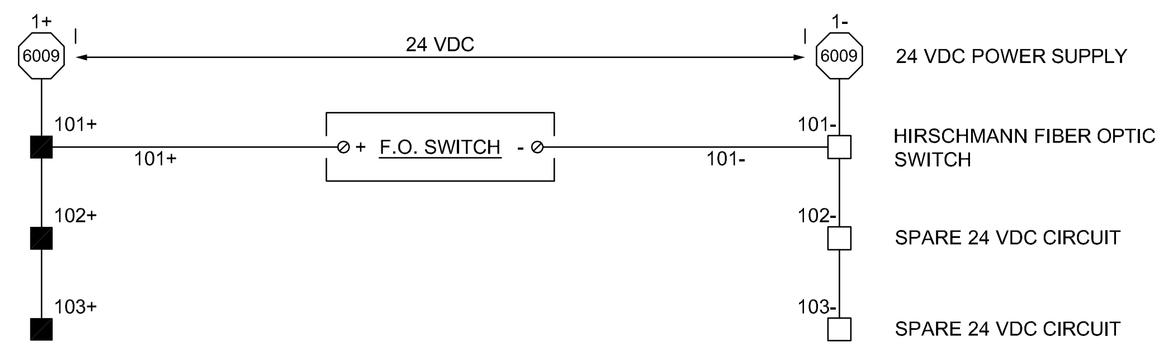


## LEGENDS

### TERMINALS

- INDICATES FEED THROUGH TERMINAL BLOCK
- INDICATES FUSED TERMINAL BLOCK FUSED AT 1A UNLESS NOTED
- INDICATES TOP HALF OF DOUBLE STACKED TERMINAL BLOCK
- INDICATES BOTTOM HALF OF DOUBLE STACKED TERMINAL BLOCK
- INDICATES TOP HALF OF FUSED DOUBLE STACKED TERMINAL BLOCK FUSED AT 1A UNLESS NOTED
- INDICATES BOTTOM HALF OF FUSED DOUBLE STACKED TERMINAL BLOCK FUSED AT 1A UNLESS NOTED
- INDICATES GROUNDED TERMINAL BLOCK

### COMPONENT LOCATION

1. DEVICE LOCATED INSIDE LEACHATE RTU
2. DEVICE LOCATED IN FIELD
3. NOT SUPPLIED BY DIVERSIFIED INTEGRATION

### WIRE NUMBERING & REFERENCES

1 2 — CONTACT REFERENCING
CONTACT TERMINAL

100X1
5001 — WIRE REFERENCING
SCHEMATIC LINE NUMBER
SCHEMATIC DRAWING NUMBER
WIRE OR CABLE NUMBER

| REV | DESCRIPTION | DATE | APPR | NOTES: |
|---|---|---|---|---|
| | | | | |

SCADA SYSTEM
ADMINISTRATION BUILDING FIBER
OPTIC PANEL
POWER DISTRIBUTION SCHEMATIC


*Diversified Integration Inc.*
*2113 Fries Road, Galax, VA 24333*
*Tel: (276) 236-7211 Fax: (276) 236-0170*
*Email: dillonbryan@comcast.net*


FILENAME: SS9
DATE: 4/10/09
DRAWN BY: B. DILLON
SCALE: NONE
PROJECT NO. 09018

**APPROVED DESIGN GUIDELINES FOR INFORMATION ONLY**

SS9