CONSOLIDATE LOWER PORTION OF EXIST JAMBS WITH EPOXY METHOD. RE-PAINT ENTIRE JAMB.

REMOVE EXIST TWO-PIECE THRESHOLD AND REPLACE WITH ONE-PIECE WALNUT THRESHOLD TO MATCH PROFILE OF EXIST THRESHOLD AT DOOR D5. SCRIBE TO FIT TIGHTLY TO SILL & FLOOR.

CHIP OUT EXIST MORTAR AT STONE STEP W/O DAMAGING STONE. REMOVE AND REINSTALL STONE ON NEW CONC PAD. SEE DETAIL THIS SHEET.

SPREAD EXIST EAST JAMB TO REDUCE GAP BET DOOR AND FRAME TO ALLOW DOOR TO CLOSE INTO ORIGINAL REBATE. PROVIDE SEALANT & BACKER ROD AT GAP BET BRICK & FRAME, POINT W/ MORTAR.

COST

CLEAN & REPAINT EXTERIOR TO MATCH EXIST. CLEAN INTERIOR FINISH ONLY.

1 A-5 DOOR D1 DETAILS
NO SCALE

REMOVE EXIST OAK THRESHOLD AND REPLACE WITH WALNUT THRESHOLD TO MATCH PROFILE OF EXIST THRESHOLD AT DOOR D5. SCRIBE TO FIT TIGHTLY TO SILL & FLOOR.

CONSOLIDATE LOWER ENDS OF JAMBS W/ EPOXY METHOD

REMOVE EXIST CONC SILL. REPLACE W/ ONE-PIECE WALNUT SILL TO MATCH M.O. WIDTH. EXIST DOVETAILS @ BOT OF FRAME SHALL REMAIN. CONNECT NEW SILL TO EXIST DOVETAILS.

REMOVE EXIST STONE STEPS. REINSTALL EXIST 48" WIDE STONE PIECE ON CONC PAD AT 6" BELOW TOP OF EXIST SILL. SEE DETAIL THIS SHEET.

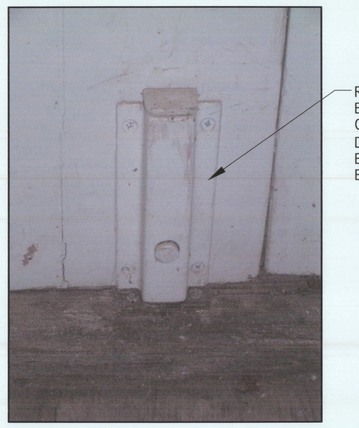

REMOVE EXIST BOT DOOR BOLTS ON DOORS D2 & D3. REPLACE W/ BOLTS TO MATCH EXIST TOP BOLT

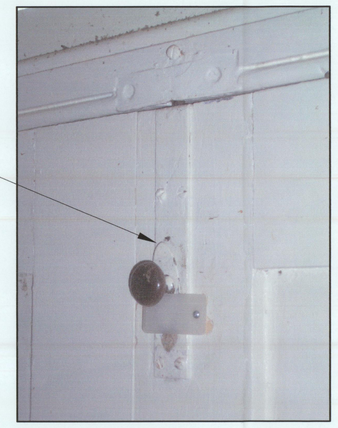

COST

REMOVE EXIST. INT. & EXT. PAINT, SAND, & REPAINT TO MATCH EXIST.

2 A-5 DOOR D2 DETAILS
NO SCALE

REMOVE EXIST METAL & WOOD SILL BELOW. REPLACE W/ ONE-PIECE WALNUT SILL TO MATCH M.O. WIDTH. EXIST DOVETAILS @ BOT OF FRAME SHALL REMAIN. CONNECT NEW SILL TO EXIST DOVETAILS.

REMOVE EXIST STONE STEP & CONC

REMOVE AND REINSTALL EXIST STONE ON NEW CONC PAD. SEE DETAIL THIS SHEET.

REMOVE EXIST TOP DOOR BOLT & RESTORE TO MATCH EXIST TOP BOLT ON DOOR D2

COST

REMOVE EXIST. INT. & EXT. PAINT, SAND, & REPAINT TO MATCH EXIST.

3 A-5 DOOR D3 DETAILS
NO SCALE

CONSOLIDATE LOWER JAMBS W/ EPOXY & WALNUT INFILL BLOCKS. CLEAN & PAINT ENTIRE FRAME.

REMOVE, CLEAN, & REINSTALL EXIST HINGES. REPLACE EXIST PHILLIPS SCREWS W/ FLAT-HEAD SCREWS.

REMOVE EXIST SILL & REPLACE W/ ONE-PIECE WALNUT SILL TO MATCH DOOR ? SCRIBE & TIGHTLY FIT TO FLOOR.

REMOVE EXIST STONE BELOW SILL TO BELOW GRADE. REPLACE W/ BRICK TO MATCH, COURSE, AND ALIGN W/ EXIST ADJ BRICK & MORTAR.

COST

REMOVE EXIST. INT. & EXT. PAINT, SAND, & REPAINT TO MATCH EXIST.

4 A-5 DOOR D4 DETAILS
NO SCALE

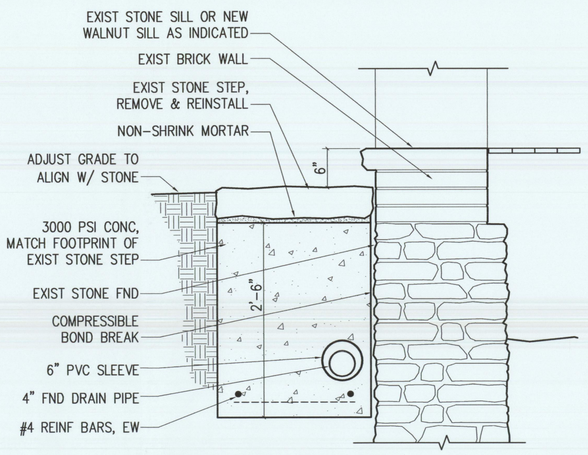

5 A-5 STONE STEP
1"=1'-0"

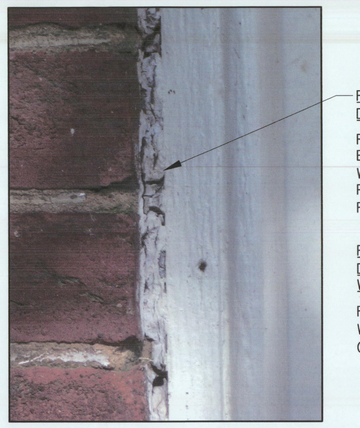

FOR CRACKS AROUND EXTERIOR DOOR FRAMES OVER 1/4" WIDE:

REMOVE EXIST CAULK. PROVIDE BACKER ROD & SEALANT TO WITHIN 1/2" OF FRAME FRONT. PROVIDE MORTAR OVER CAULK FLUSH W/ FRAME FRONT.

FOR CRACKS AROUND EXTERIOR DOOR FRAMES LESS THAN 1/4" WIDE:

REMOVE EXIST CAULK. REPLACE W/ CAULK TO MATCH MORTAR COLOR, FLUSH W/ FRAME FRONT.

6 A-5 TYP. DOOR FRAME EXTERIOR CAULKING
NO SCALE

COST

Samaha Associates P.C. architects

COMMONWEALTH OF VIRGINIA
SEMON S. SAMAHA
(LICENSE No. 3941)
ARCHITECT

9990 Lee Highway Suite 350 Fairfax, VA 22030
Phone 703-691-3311 Fax 703-691-3316

Douglass C. Reed
Historic Structures Consultants
P.O. Box 185
Smithsburg, MD 21783
1-301-730-2699
douglasscreed@myactv.net

Mount ZION Church Restoration

Loudoun County Department of Parks, Recreation, and Community Services

Virginia State project # 0000

Sheet Title:

DOOR DETAILS

Drawing Number. – Of

A–5

Issue Date: 4/24/05

Drawn By: TRS
Checked By: RAM
Project Number: 1184000