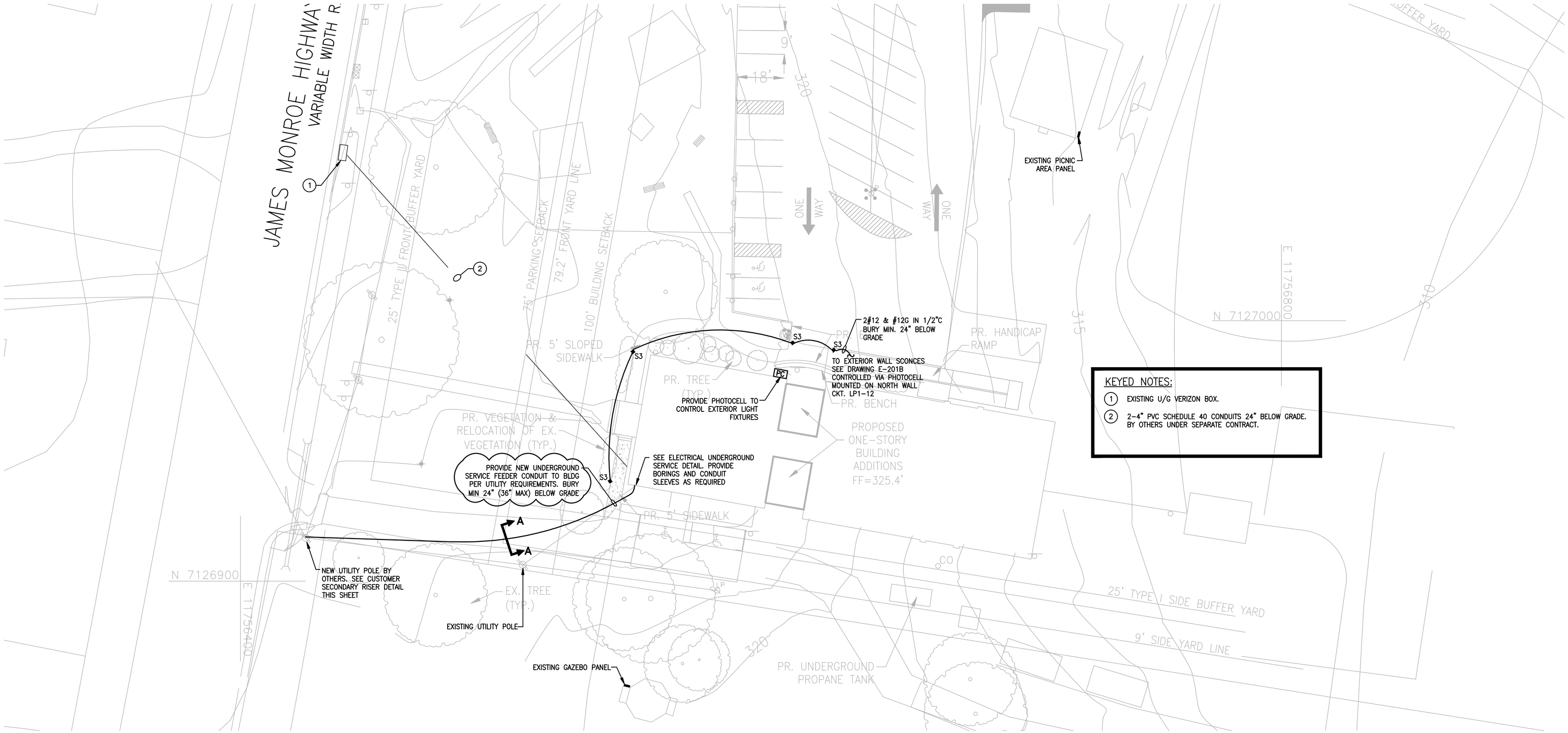

KEYED NOTES:

1. EXISTING U/G VERIZON BOX.
2. 2-4" PVC SCHEDULE 40 CONDUITS 24" BELOW GRADE. BY OTHERS UNDER SEPARATE CONTRACT.

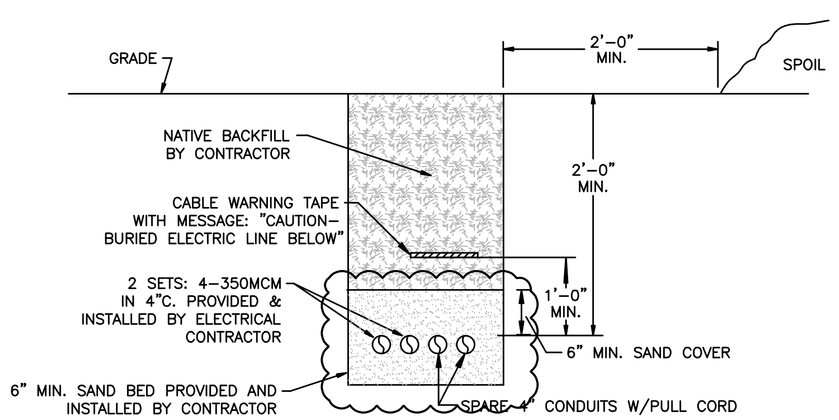

NOTE:
SAND SHALL PASS THROUGH A 3/8" MESH SCREEN AND SHALL NOT CONTAIN SHARP STONES. OTHER BACKFILL SHALL NOT CONTAIN ASHES, CINDERS, SHELL, FROZEN MATERIAL, LOOSE DEBRIS OR STONES LARGER THAN 2" IN DIAMETER. THE TRENCH SHALL BE BACKFILLED IMMEDIATELY FOLLOWING PLACEMENT OF THE CABLE.

SECTION A-A: UNDERGROUND ELECTRICAL SERVICE TRENCH DETAIL

NO SCALE

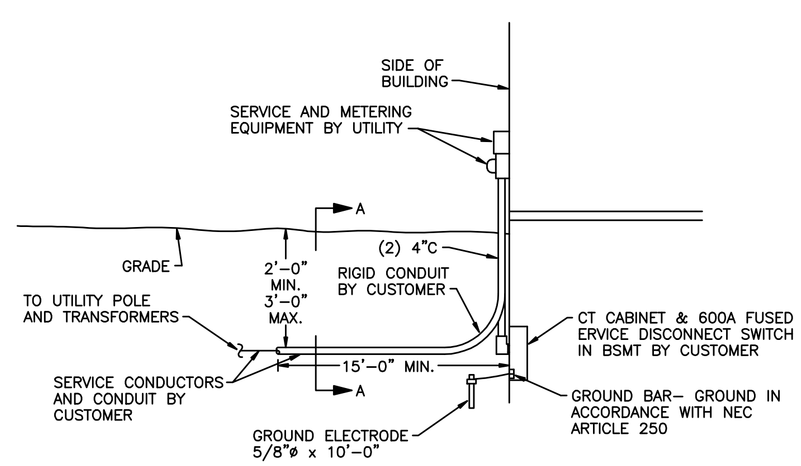

ELECTRICAL UNDERGROUND SERVICE

NO SCALE

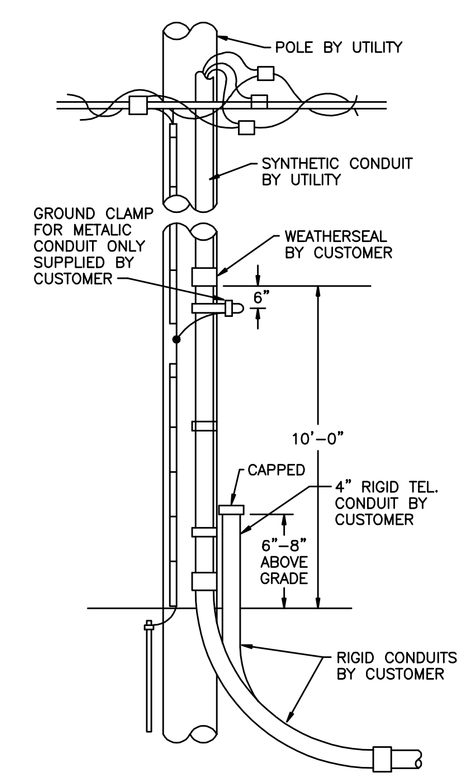

CUSTOMER SECONDARY RISER

NO SCALE

NOTE: COORDINATE AND COMPLY WITH POWER COMPANY REQUIREMENTS.

ARCHITECT

bh+a

Bergmann Hendrie + Archetype, In
300 A Street
Boston, MA 02210
617 350-0450 Tel
617 350-0215 Fax
www.bhplus.com

PROJECT NAME

Lucketts Community Center

42361 Lucketts Road
Lucketts, Virginia

CLIENT

Loudoun County, Virginia Department of Construction and Waste Management

211 Gibson St NW
Lucketts, VA 20176
(703) 737-8998 tel
(703) 771-5097 fax

PROJECT TEAM

Civil / Landscape:
William H. Gordon Associates, Inc.
44084 Riverside Pkwy, Suite 100
Leesburg, VA 20176
703-729-9009 tel
703-478-8517 fax

Structural:
Linton Engineering, Inc.
8229 Boone Boulevard
Vienna, VA 22182
571-323-0320 tel
571 323-0689 fax

Plumbing/ Fire Protection/ Mechanical/ Electrical
Landmark Facilities Group
262 East Avenue
Norwalk, CT 06855
203-866-4626 tel
203-866-8019 fax

REVISIONS

1	ADDENDUM #1	8/4/10
2		
3		
4		
5		

DATE

DRAWING TITLE

Electrical Site Plan

DRAWING INFORMATION

July 16, 2010
DATE OF ISSUE
BID DOCUMENTS
DESCRIPTION
1" = 20'-0"
SCALE
ECY
DRAWN BY
PROJECT #
FILE NAME

DRAWING NUMBER

SE-001

Copyright BH+A, Inc.