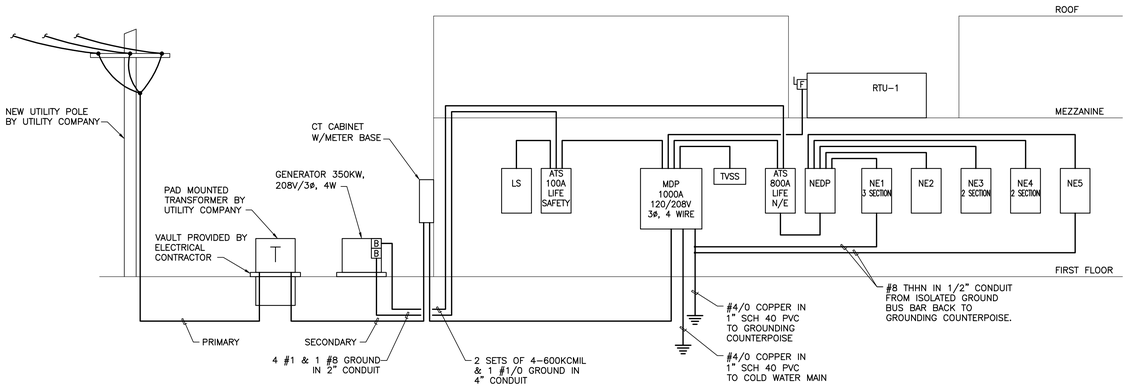

ONE-LINE RISER DIAGRAM

NO SCALE

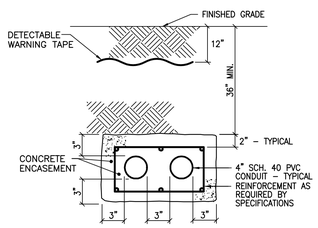

DUCTBANK DETAIL SECTION 'A'-'A'

NO SCALE

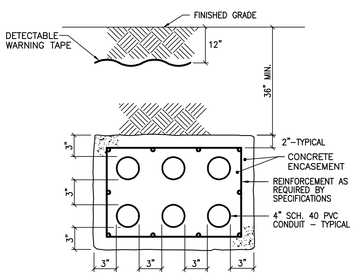

DUCTBANK DETAIL SECTION 'B'-'B'

NO SCALE

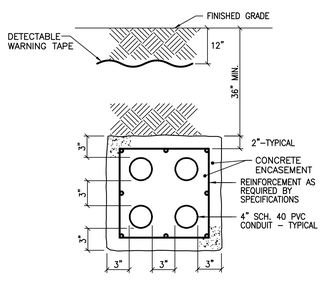

DUCTBANK DETAIL SECTION 'C'-'C'

NO SCALE

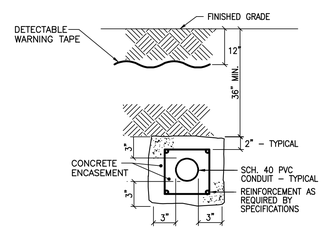

TYPICAL CONDUIT INSTALLATION AT ROADWAY

NO SCALE

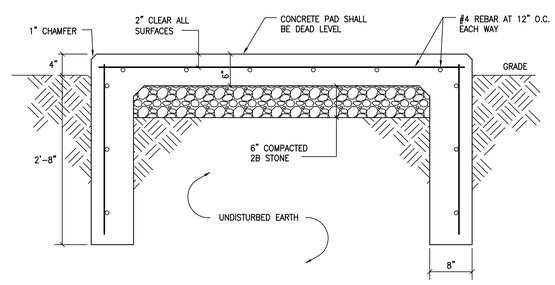

EQUIPMENT PAD DETAIL

NO SCALE

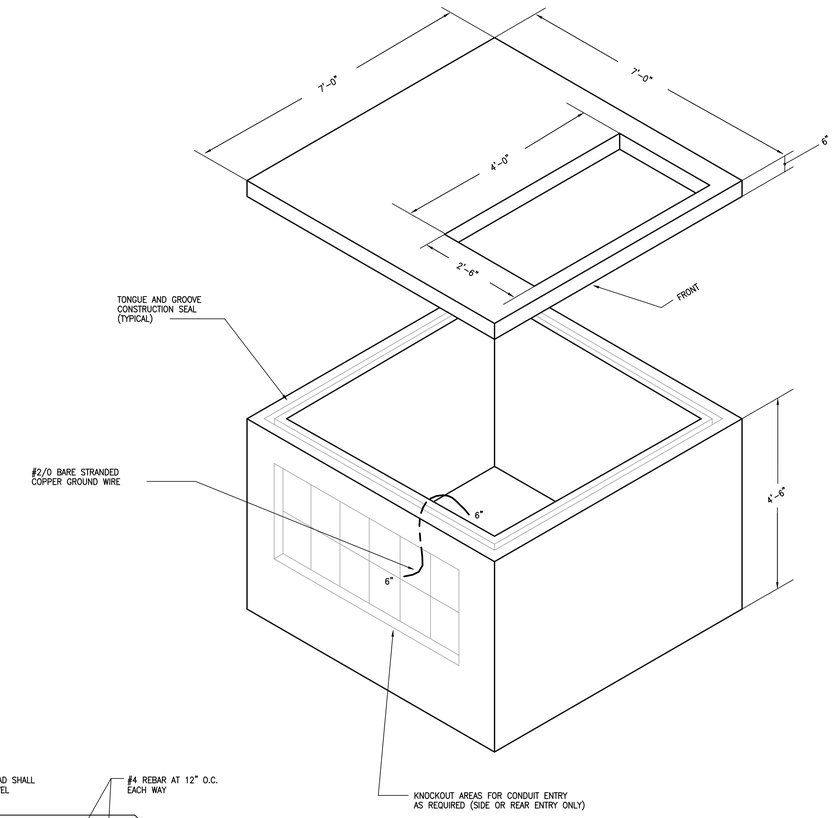

PRECAST TRANSFORMER FOUNDATION DETAIL

NO SCALE

NOTES:

1. TOP OF FOUNDATION TO BE SET 6" ABOVE FINISHED GRADE.
2. FOUNDATION TO BE SET ON 6" OF COMPACTED #2B CRUSHED STONE.

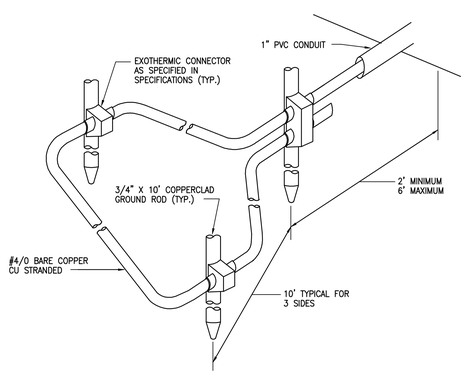

COUNTERPOISE GROUNDING DETAIL

NO SCALE

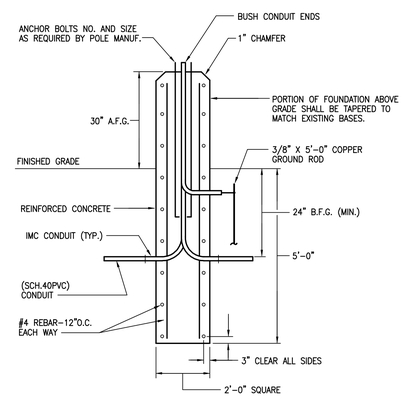

TYPICAL POLE BASE DETAIL

NO SCALE

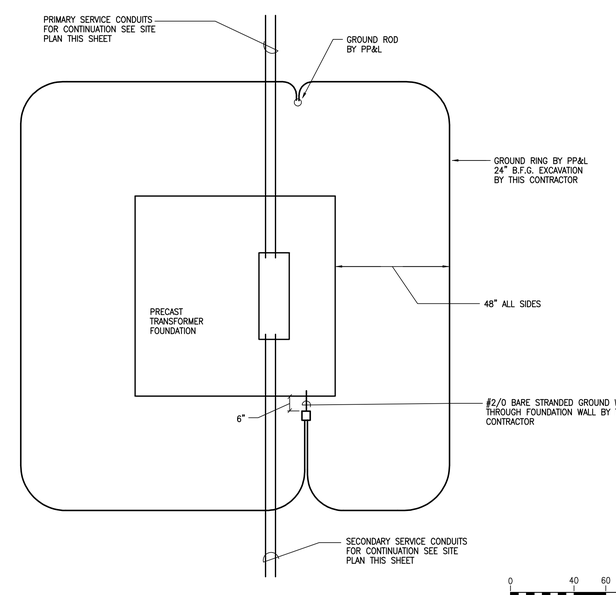

TRANSFORMER FOUNDATION GROUNDING DETAIL

NO SCALE

0 40 60 80 120

NOTE:
CONTRACTOR SHALL CHECK & VERIFY ALL DIMENSIONS & EXISTING CONDITIONS AT SITE.

BID SET

HUGHES GROUP ARCHITECTS
22630 DAVIS DRIVE, SUITE 175
STERLING, VIRGINIA 20164
703.437.6600

CIVIL:
ALPHA CORPORATION
21351 Ridgetop Circle, Suite 200
Sterling, VA 20166
(703) 450-0800

STRUCTURAL:
EHLERT-BRYAN
1451 Dolley Madison Blvd. Suite 220
Mclean, VA 22101
(703) 827-9552

MECHANICAL/ELECTRICAL:
BRINJAC ENGINEERING
4000 Albermarle Street, NW
Washington, DC 20016
(202) 237-2750

PURCELLVILLE FIRE AND RESCUE

500 MAPLE AVE. BUILDING #
PURCELLVILLE, VIRGINIA

POWER RISER DIAGRAM AND DETAILS

KEY PLAN

REVISIONS:

ISSUES:
9-26-07 BID SET

STAMP AND SEAL:

DATE: 09-26-07
SCALE: AS NOTED
PROJECT NO. 0611
SHEET: E-501

Copyright © 2007 by Hughes Group Architects