SURVEYED BY .....
SUPERVISED BY AAA
DESIGNED BY Dewberry (703) 849-0607

DESIGN FEATURES RELATING TO CONSTRUCTION OR TO REGULATION AND CONTROL OF TRAFFIC MAY BE SUBJECT TO CHANGE AS DEEMED NECESSARY BY THE DEPARTMENT

REVISED	FHWA REGION	STATE	FEDERAL AID PROJECT	STATE ROUTE	STATE PROJECT	SHEET NO.
7/17/08	3	VA.		7		2E(2)

GRADING DIAGRAM AND SUMMARY

IN PROGRESS 09/26/08
NOT FOR CONTRUCTION

- ⊢130⊣ Fill — Denotes fill quantity from computer listings and/or manual cross-sections.
- ⊢130⊣ Cut — Denotes cut quantity from computer listings and/or manual cross-sections.
- Denotes yd³ root mat material in cut areas which is included in Regular Excavation quantities.
- Denotes yd³ root mat material removed from fill sections and backfilled.
- Denotes yd³ unsuitable material above subgrade
- Denotes yd³ of excavation of unsuitable mat'l. below subgrade. See Sheet 2J(3) for backfill material.
- Denotes yd³ Minor Structure Excavation.
- Denotes yd³ existing pavement to be removed as "Demolition of Pavement."
- Denotes yd³ Haul.
- Denotes yd³ fill for S.W.M.(Stormwater Management Basin)
- Denotes yd³ cut from S.W.M.(Stormwater Management Basin)
- Denotes yd³ Borrow Material
- Denotes yd³ Surplus Material.
- Denotes yd³ pipe undercut excavation which is included in Total Regular Excavation.

Stage 1-2 Construction

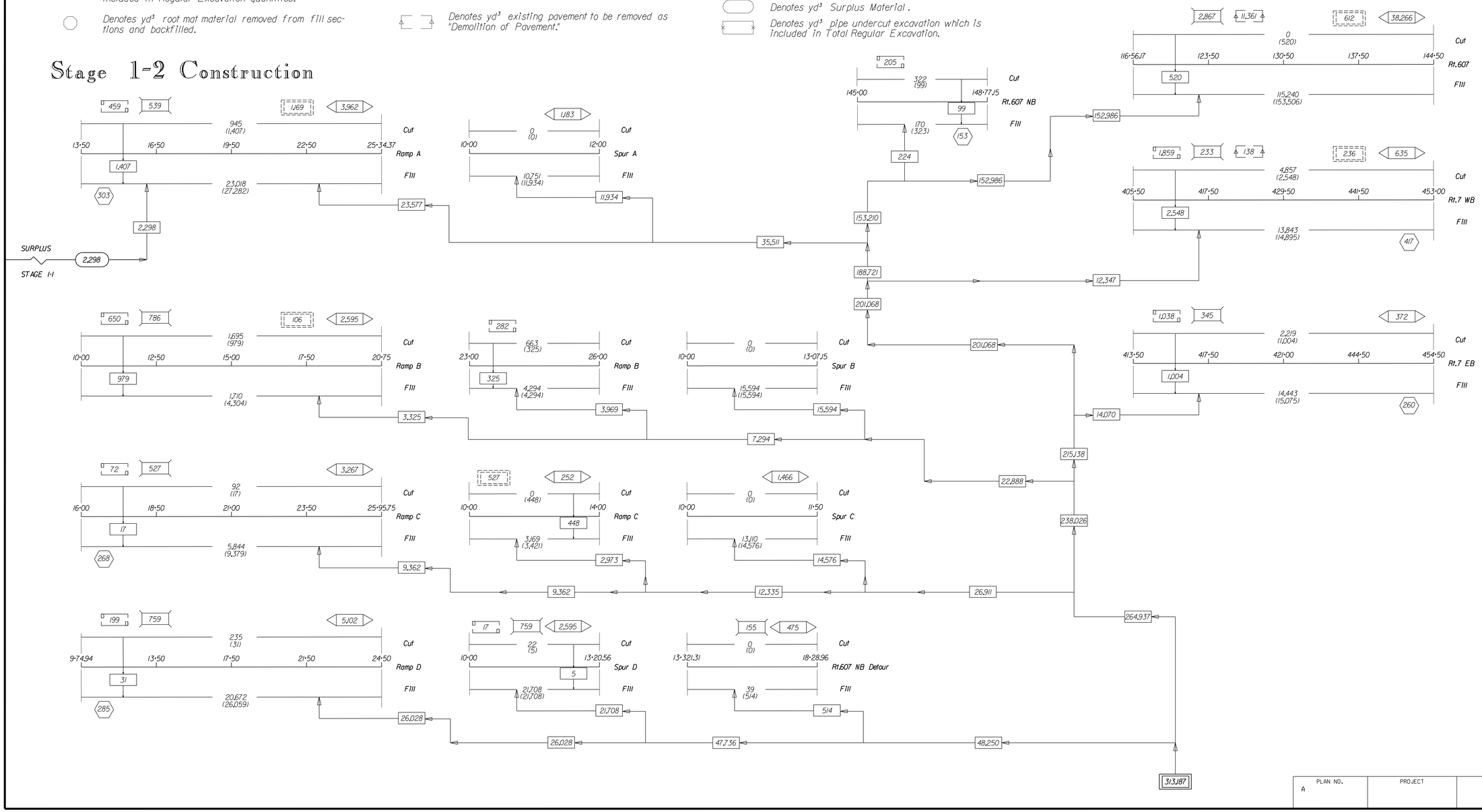

COMMONWEALTH OF VIRGINIA
DAVID JOHN MAHONEY
Lic. No. 020798
PROFESSIONAL ENGINEER

PLAN NO.	PROJECT	FILE NO.	SHEET NO.
A			2E(2)