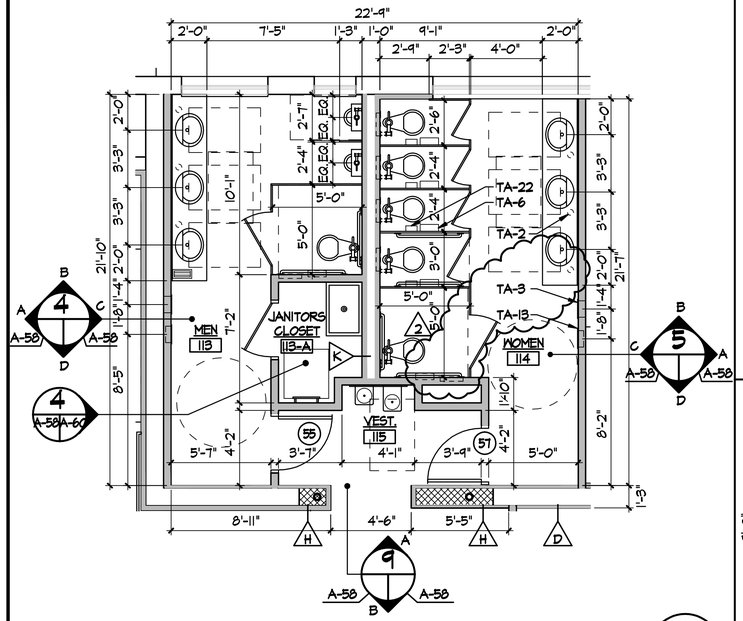

ENLARGED RESTROOM PLAN - NEW WORK

1/4"=1'-0"

1 | A-30 | A-58

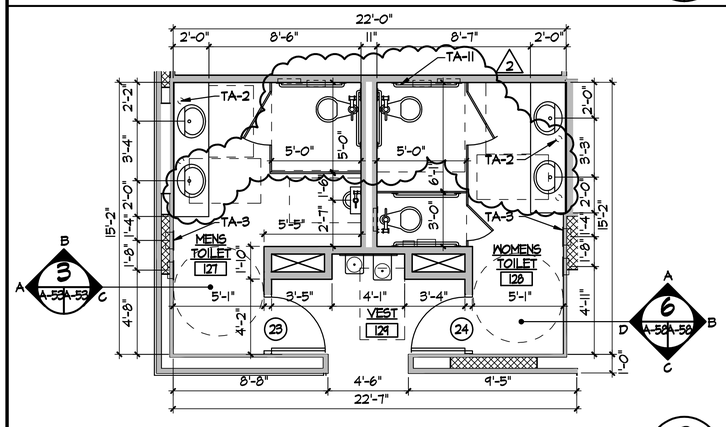

ENLARGED RESTROOM PLAN - NEW WORK

1/4"=1'-0"

2 | A-31 | A-58

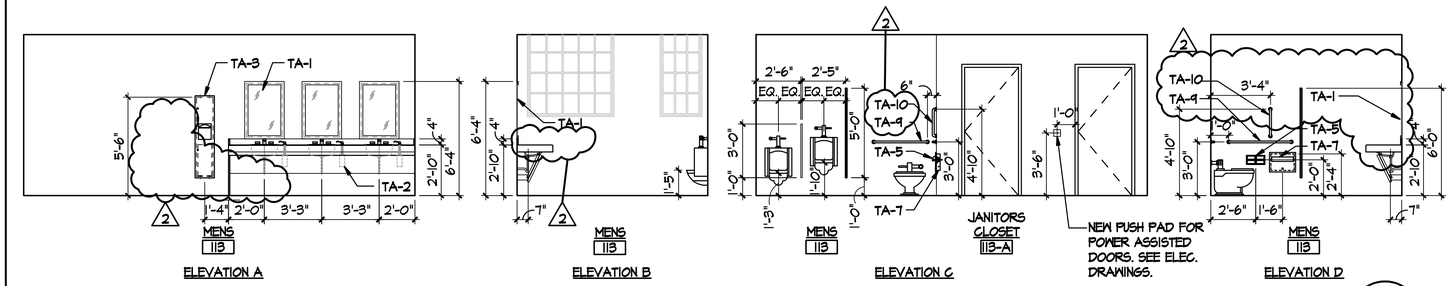

MEN'S RESTROOM ELEVATION - NEW WORK

1/4"=1'-0"

4 | A-58 | A-58

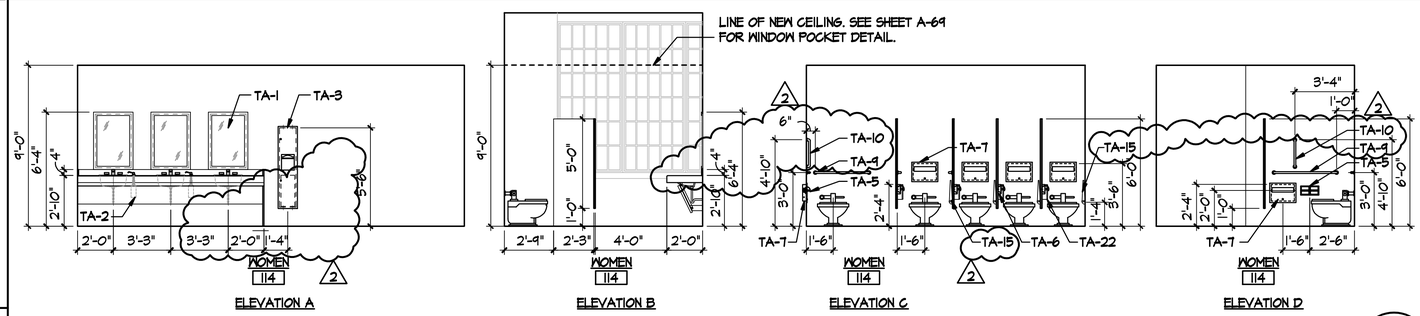

WOMEN'S RESTROOM ELEVATION - NEW WORK

1/4"=1'-0"

5 | A-58 | A-58

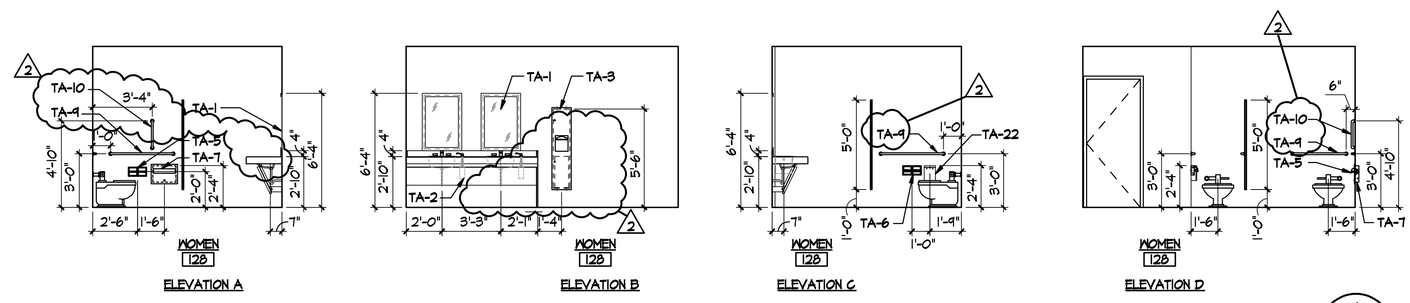

RESTROOM ELEVATION - NEW WORK

1/4"=1'-0"

6 | A-58 | A-58

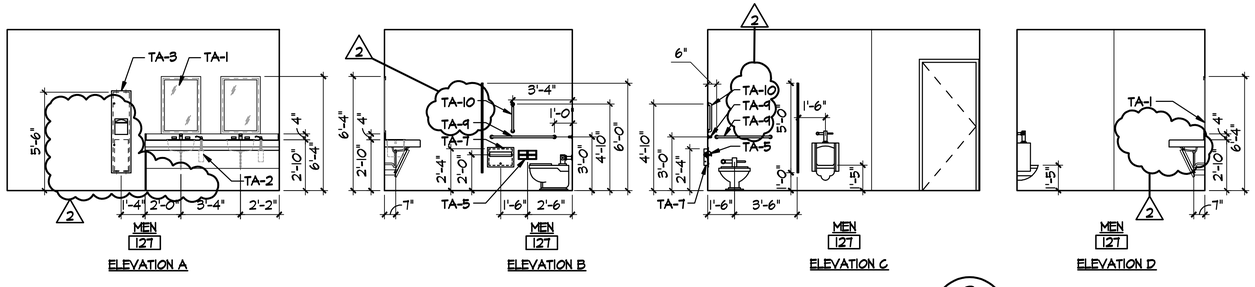

RESTROOM ELEVATION - NEW WORK

1/4"=1'-0"

3 | A-58 | A-58

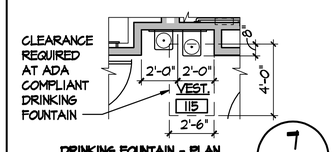

DRINKING FOUNTAIN - PLAN

1/4"=1'-0"

7 | A-58 | A-58

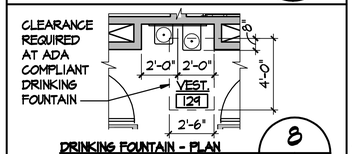

DRINKING FOUNTAIN - PLAN

1/4"=1'-0"

8 | A-58 | A-58

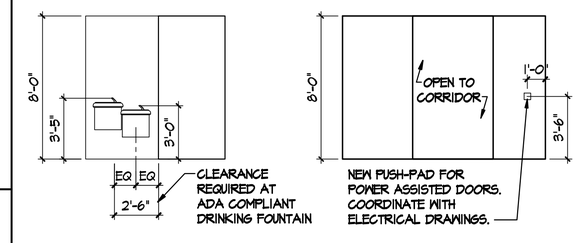

DRINKING FOUNTAIN ELEVATION

1/4"=1'-0"

9 | A-58 | A-58

Loc.	Description	Date	App.
2	ADDENDUM 2		
	09-23-2009		

Prj. Arch.	PECK PECK AND ASSOC
Prj. Eng.	
Drawn	AP/RV/SF
Scale	AS NOTED
Checked	DKP/GPP
Issued	08-24-09
App.	

Project Title:
NORTH STREET BUILDING RENOVATION
102 NORTH STREET LEESBURG, VIRGINIA
BID SUBMITTAL
County Building No.: 6277

COUNTY OF LOUDOUN

Project Management By:
PECK • PECK & ASSOCIATES, INC.
architecture planning graphics interiors
2050 OLD BRIDGE ROAD, WOODBRIDGE, VA 22192
(703) 690-9121 FAX (703) 690-1768

Sheet Contents:
RESTROOMS - ENLARGED PLANS AND DETAILS - NEW WORK

Drawing No.:
A-58