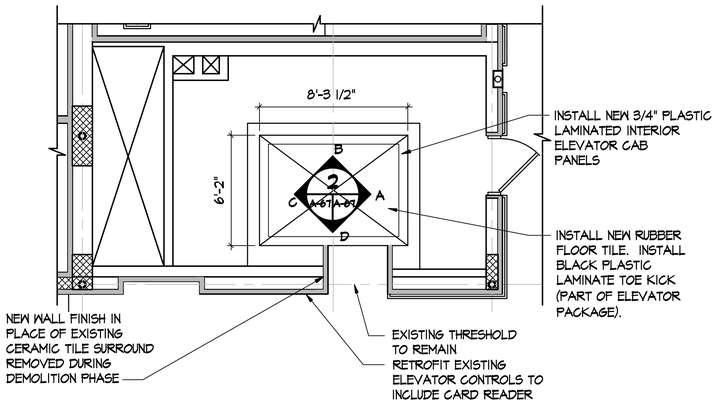

ELEVATOR - ENLARGED PLAN (1 / A-31 | A-67)

1/4"=1'-0"

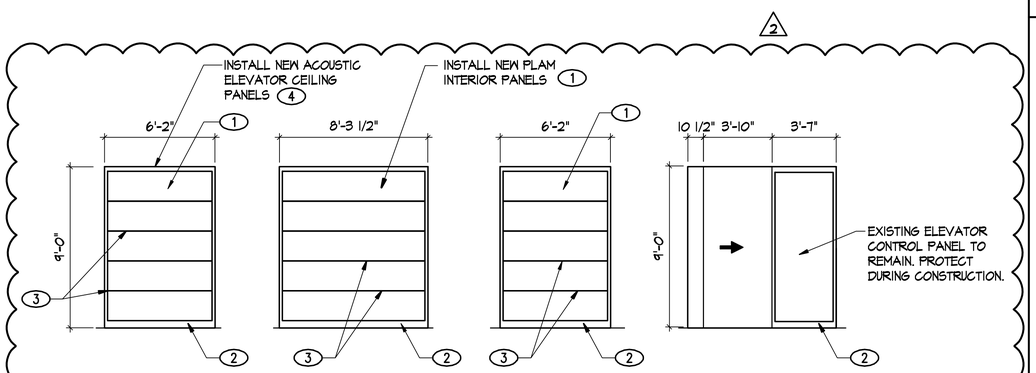

ELEVATOR - CAB ELEVATIONS (2 / A-31 | A-67)

1/4"=1'-0"

INTERIOR CAB BASIS OF DESIGN:

BASIS OF DESIGN: OTIS "HORIZONS" ELEVATOR CAB INTERIOR

1	INTERIOR PANELS:	3/4 INCH THICK CLASS "A" FIRE RATING REMOVABLE
2	TOE KICK:	4 INCH BLACK PLASTIC LAMINATE
3	REVEALS:	FINISH: AS SELECTED BY ARCHITECT FROM MANUFACTURER'S FULL RANGE
4	CEILING:	STANDARD DIFFUSED LIGHTING

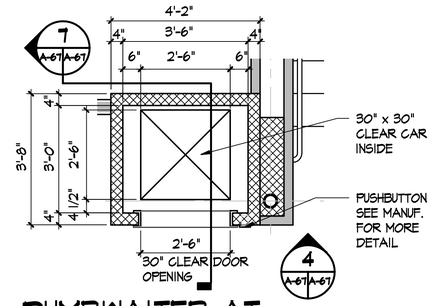

DUMBWAITER AT UPPER FLOOR - PLAN (3 / A-31 | A-67)

1/2"=1'-0"

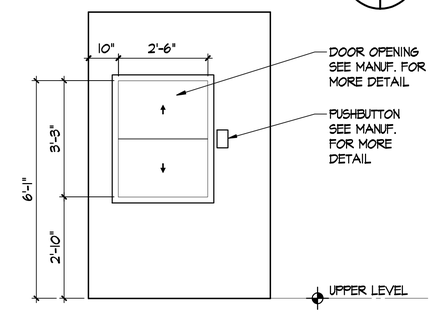

DUMBWAITER AT UPPER FLOOR - ELEVATION (4 / A-67 | A-67)

1/2"=1'-0"

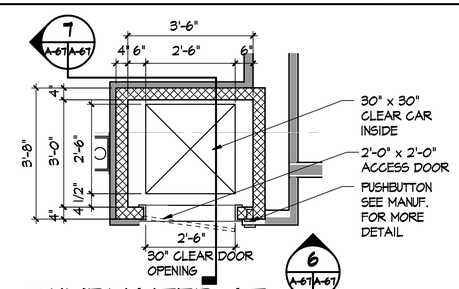

DUMBWAITER AT LOWER FLOOR - PLAN (5 / A-32 | A-67)

1/2"=1'-0"

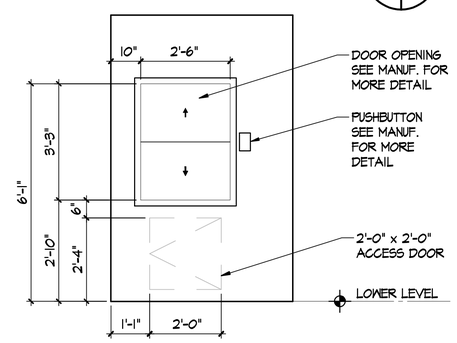

DUMBWAITER AT LOWER FLOOR - ELEVATION (6 / A-67 | A-67)

1/2"=1'-0"

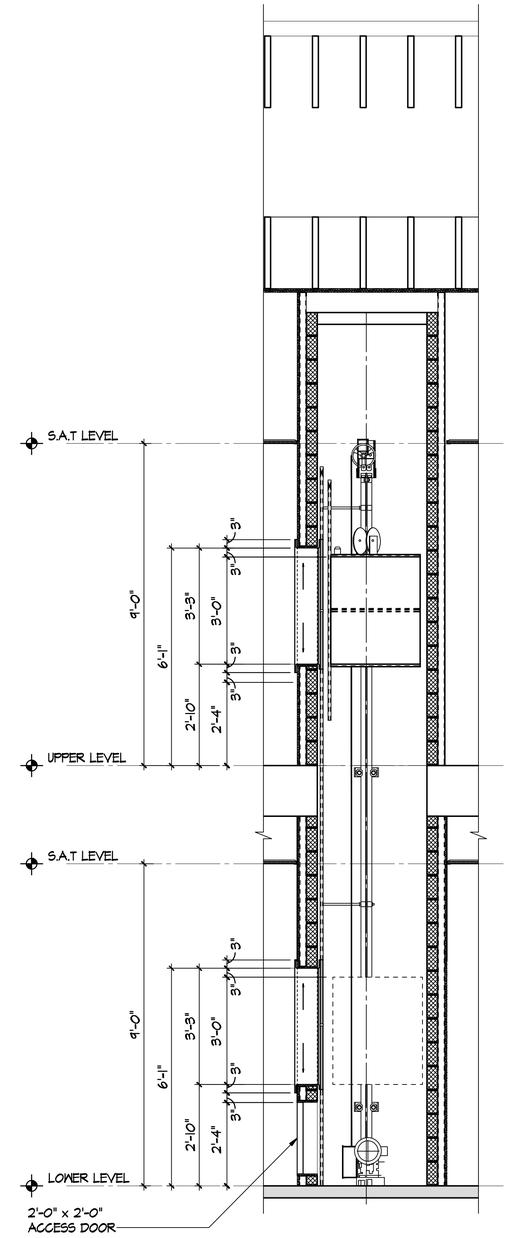

DUMBWAITER SECTION (7 / A-67 | A-67)

1/2"=1'-0"

GRAPHIC SCALE:

2' 0 4' 8'
1/4" = 1'-0"

1' 0 2' 4'
1/2" = 1'-0"

Loc.	Description	Date	App.
2	ADDENDUM 2		
	09-23-2009		

Prj. Arch.	PECK PECK AND ASSOC
Prj. Eng.	
Drawn	AP/RV/SF
Scale	AS NOTED
Checked	DKP/GPP
Issued	08-24-09
App.	

Project Title:
NORTH STREET BUILDING RENOVATION
102 NORTH STREET LEESBURG, VIRGINIA
BID SUBMITTAL
County Building No.: 6277

COUNTY OF LOUDOUN

Project Management By:
PECK • PECK & ASSOCIATES, INC.
architecture planning
graphics interiors
2050 OLD BRIDGE ROAD, WOODBRIDGE, VA 22192
(703) 690-9121 FAX (703) 690-1768

Sheet Contents:
ELEVATOR AND DUMBWAITER DETAILS

Drawing No.:
A-67