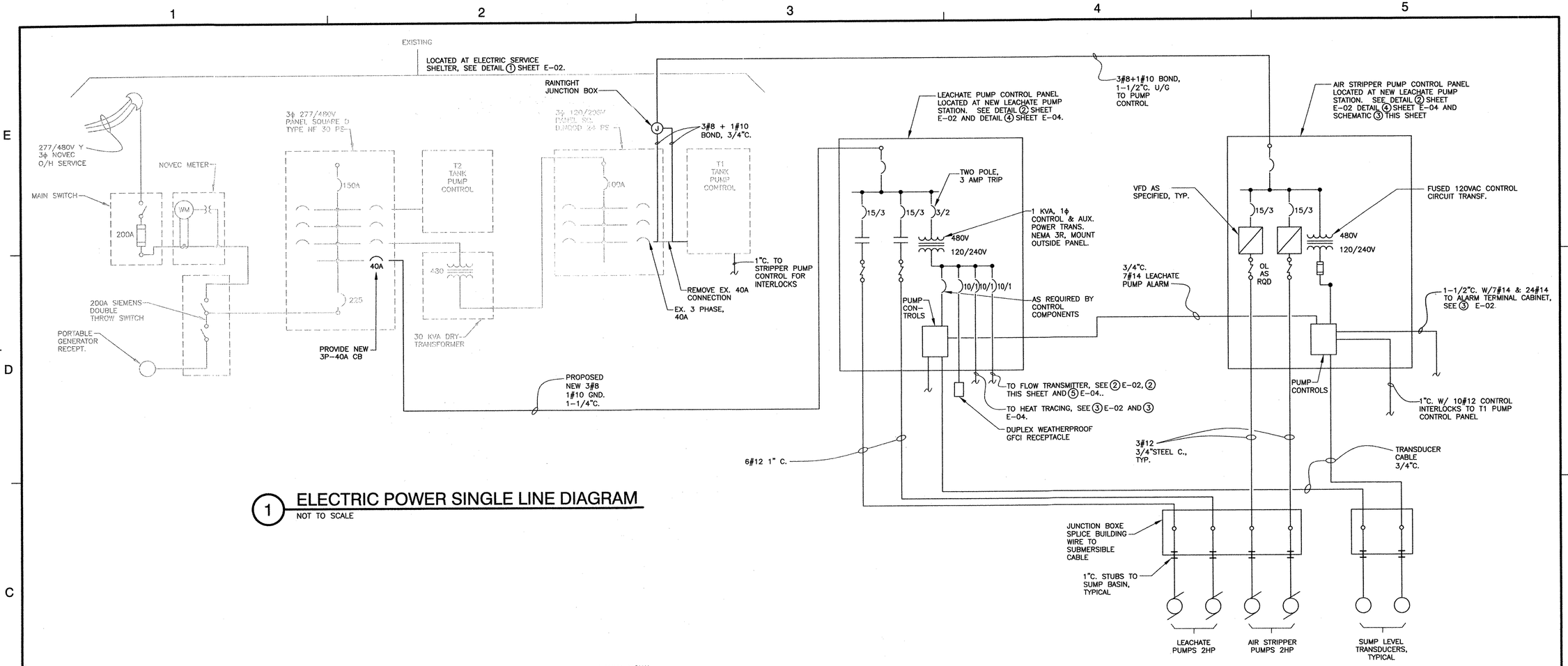

1 ELECTRIC POWER SINGLE LINE DIAGRAM
NOT TO SCALE

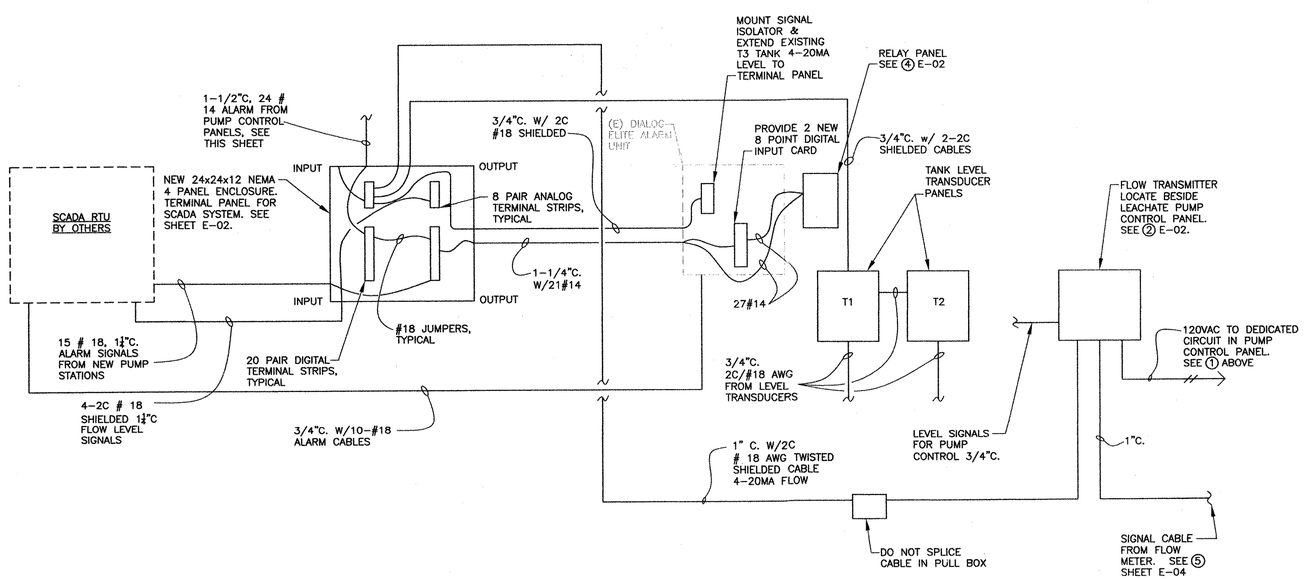

2 SCHEMATIC SIGNAL WIRING
NOT TO SCALE

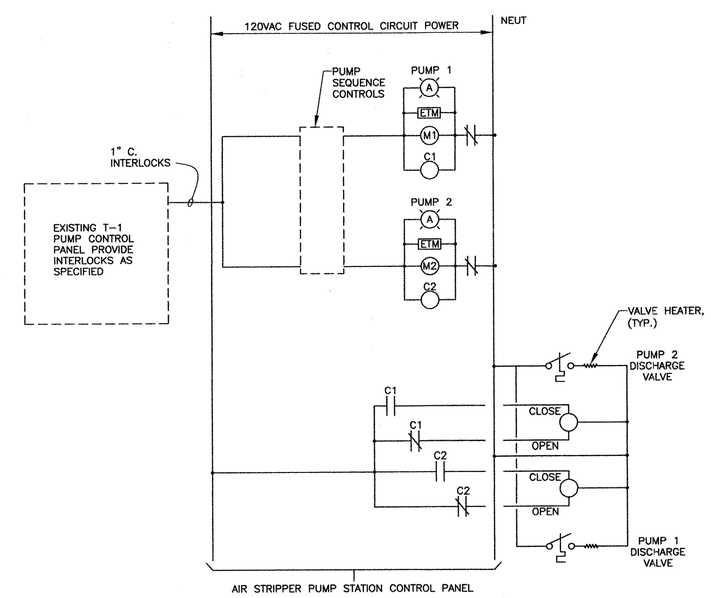

3 SCHEMATIC WIRING AIR STRIPPER PUMPS
NOT TO SCALE

Dewberry

Dewberry & Davis LLC
8401 ARLINGTON BLVD.
FAIRFAX, VA 22031
PHONE: 703.849.0100
FAX: 703.849.0118

LOUDOUN COUNTY SOLID WASTE MANAGEMENT FACILITY

LEACHATE PUMP STATIONS & FORCE MAIN

LOUDOUN COUNTY, VIRGINIA

SEAL

COMMONWEALTH OF VIRGINIA
DAVID W. BLEVINS
Lic No.7695
4/10/09
PROFESSIONAL ENGINEER

SCALE

No.	DATE	BY	Description

REVISIONS

DRAWN BY	YR
APPROVED BY	DB
CHECKED BY	DB
DATE	4/7/09

TITLE

ELECTRICAL RISER DIAGRAM AND SCHEDULES

PROJECT NO. 50006147

E-03

SHEET NO. 9 OF 12

R:\WEED\50006147 - Loudoun County Landfill Leachate PS\CAD\Deliverables\10 E-03.dwg Apr 10, 2009 - 2:24pm