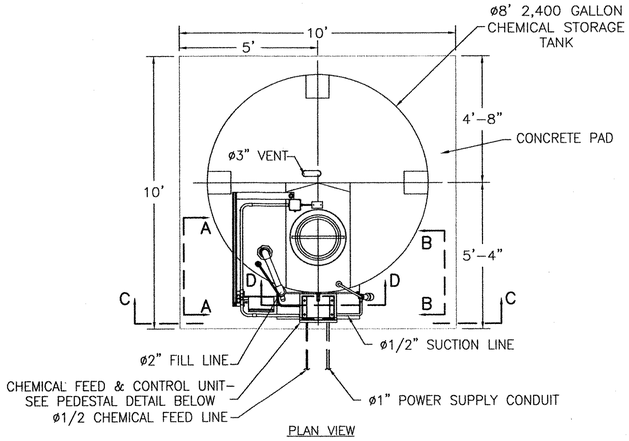

PLAN VIEW

SEE PUMP STATION SITE PLAN C-01 FOR ODOR CONTROL CONCRETE PAD LOCATION.

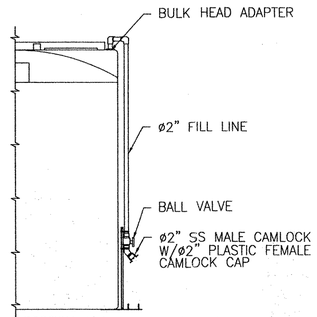

SECTION A-A
NO SCALE

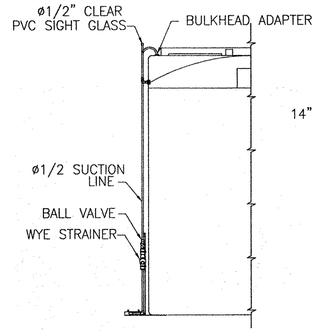

SECTION B-B
NO SCALE

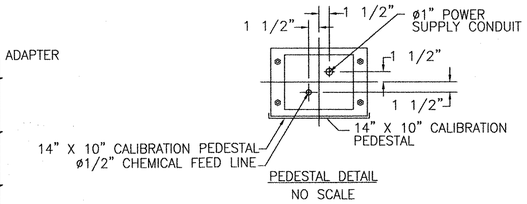

PEDESTAL DETAIL
NO SCALE

NOTES

1. CONTRACTOR TO FURNISH CONCRETE PAD WITH ALL IN-SLAB PIPING AND CONDUIT
2. ALL PIPING AND APPURTENANCES PVC, SCH 80
3. UTILIZE SWEEPS ONLY (NO ELBOWS) FOR CONDUIT DIRECTIONAL CHANGES
4. CONTRACTOR TO FURNISH AND INSTALL ALL NECESSARY SLAB OPENINGS, SLEEVES AND SEALANT
5. CONTRACTOR TO FURNISH AND INSTALL ALL NECESSARY HANGERS, SUPPORTS, AND BLOCKING FOR PIPING
6. ALL HARDWARE REQUIRED FOR INSTALLATION SHALL BE STAINLESS STEEL, FURNISHED AND INSTALLED BY CONTRACTOR
7. CONTRACTOR SHALL INSTALL ALL WIRING AND ELECTRICAL EQUIPMENT IN ACCORDANCE WITH DIVISION 16 OF THE SPECIFICATIONS

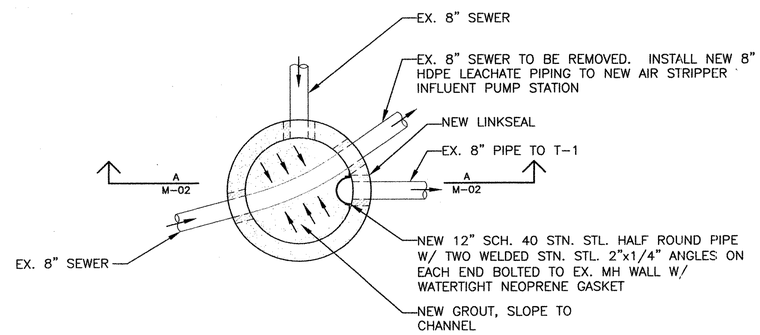

PLAN

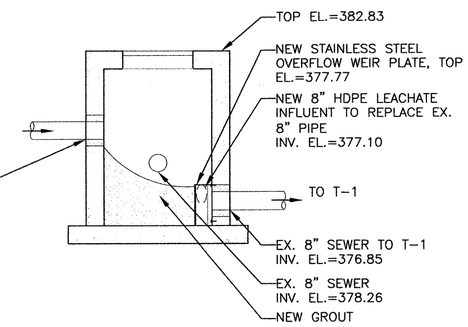

SECTION 'A'

1 EX. INFLUENT MANHOLE
SCALE: 3/8"=1'-0"
SEE SHEET C-1

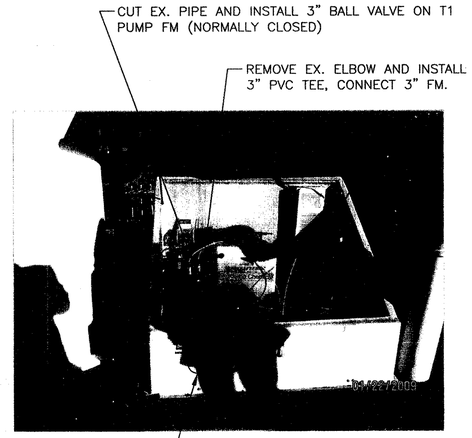

2 3" FM CONNECTION TO EX. AIR STRIPPER INFLUENT
NOT TO SCALE
SEE SHEET C-1

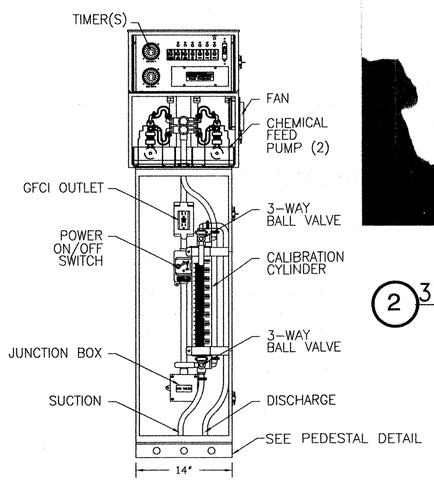

CONTROL UNIT
SECTION D-D
(DOOR REMOVED)
NTS

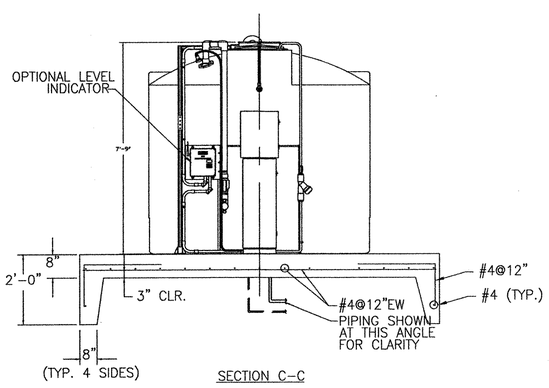

SECTION C-C

Dewberry

Dewberry & Davis LLC
8401 ARLINGTON BLVD.
FAIRFAX, VA 22031
PHONE: 703.849.0100
FAX: 703.849.0118

LOUDOUN COUNTY SOLID WASTE MANAGEMENT FACILITY

LEACHATE PUMP STATIONS & FORCE MAIN

LOUDOUN COUNTY, VIRGINIA

SEAL

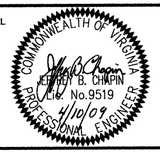

SCALE

AS NOTED

No.	DATE	BY	Description

REVISIONS

DRAWN BY	YR
APPROVED BY	ARM
CHECKED BY	JBC
DATE	4/7/09

TITLE

BIOXIDE ODOR CONTROL & INFLUENT MH PLANS/SECTIONS

PROJECT NO. 50006147

M-02

SHEET NO. 6 OF 12

R:\WEED\50006147 - Loudoun County Landfill Leachate PS\CAD\Deliverables\07 M-02.dwg Apr 09, 2009 - 2:22pm