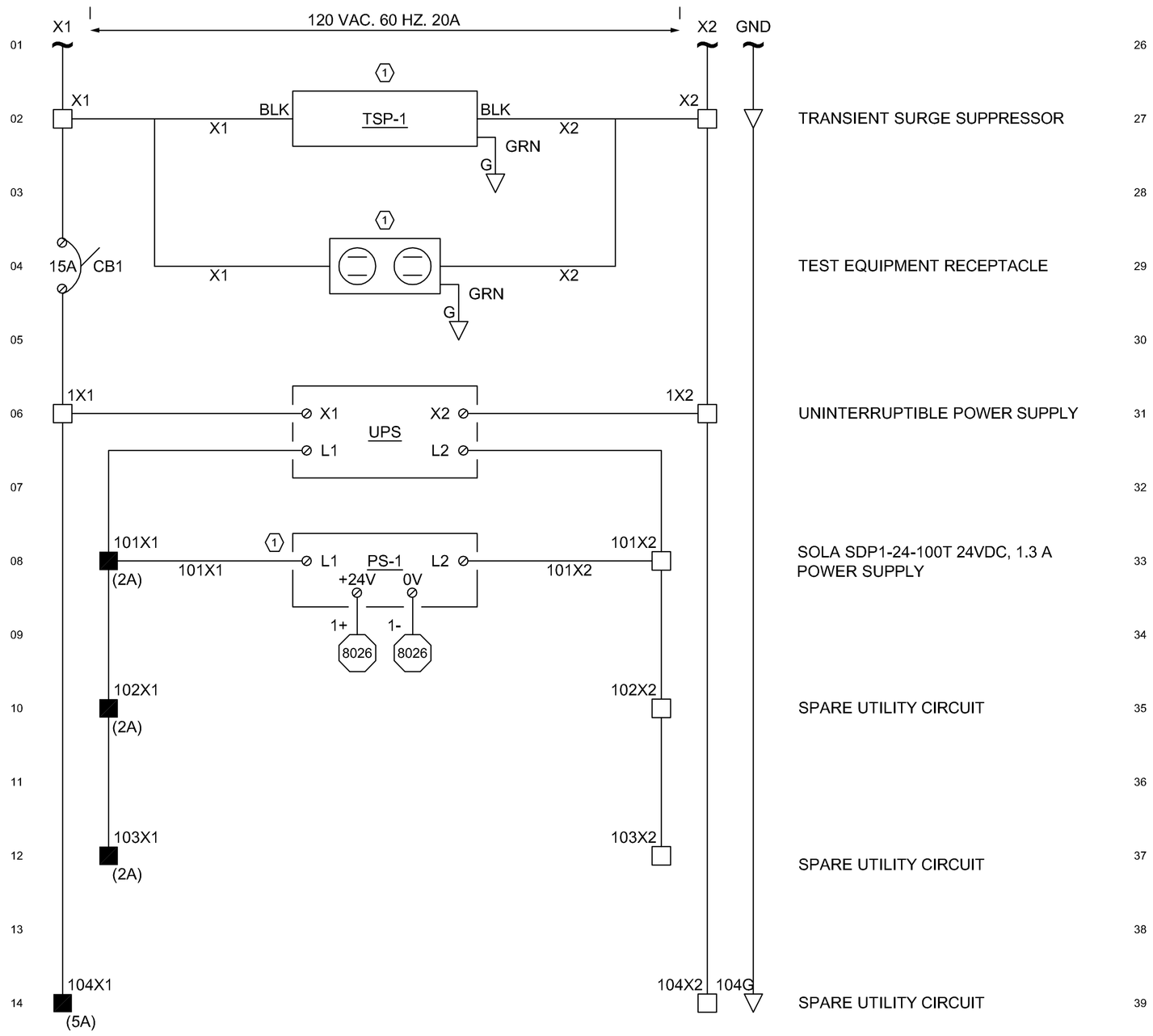

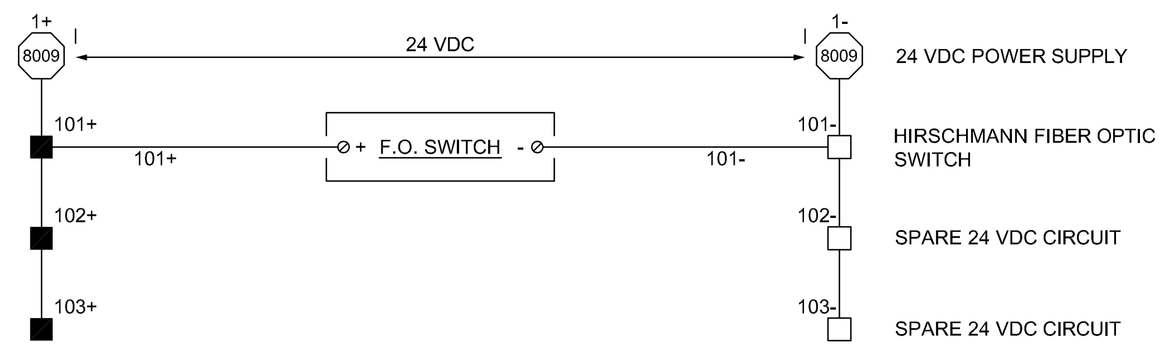

LEGENDS

TERMINALS

- INDICATES FEED THROUGH TERMINAL BLOCK
- INDICATES FUSED TERMINAL BLOCK FUSED AT 1A UNLESS NOTED
- INDICATES TOP HALF OF DOUBLE STACKED TERMINAL BLOCK
- INDICATES BOTTOM HALF OF DOUBLE STACKED TERMINAL BLOCK
- INDICATES TOP HALF OF FUSED DOUBLE STACKED TERMINAL BLOCK FUSED AT 1A UNLESS NOTED
- INDICATES BOTTOM HALF OF FUSED DOUBLE STACKED TERMINAL BLOCK FUSED AT 1A UNLESS NOTED
- INDICATES GROUNDED TERMINAL BLOCK

COMPONENT LOCATION

- (1) DEVICE LOCATED INSIDE LEACHATE RTU
- (2) DEVICE LOCATED IN FIELD
- (3) NOT SUPPLIED BY DIVERSIFIED INTEGRATION

WIRE NUMBERING & REFERENCES

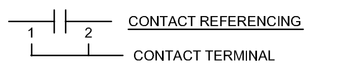

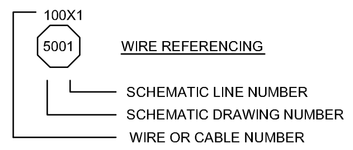

REV	DESCRIPTION	DATE	APPR

NOTES:

SCADA SYSTEMS
RTU NO.3 - FLARE FIBER OPTIC PANEL
POWER DISTRIBUTION SCHEMATIC

Diversified Integration Inc.
2113 Fries Road, Galax, VA 24333
Tel: (276) 236-7211 Fax: (276) 236-0170
Email: dillonbryan@comcast.net

FILENAME:	SS17
DATE:	4/10/09
DRAWN BY:	B. DILLON
SCALE:	NONE
PROJECT NO.	09018

APPROVED DESIGN GUIDELINES FOR INFORMATION ONLY

SS17