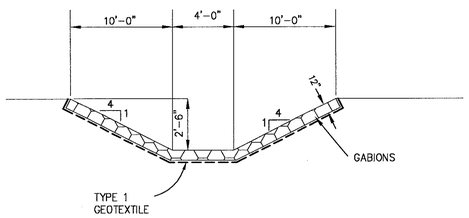


| NO. | SLOPE | Q25 | V25 | D25 | N | LINING |
|---|---|---|---|---|---|---|
| 1 | 33% | 96.59 | 20.25 | 0.76' | 0.028 | GABIONS |

| NO. | SLOPE | Q10 | V2 | D10 | N | LINING |
|---|---|---|---|---|---|---|
| 2 | 33% | 16.39 | 12.88 | 0.63' | 0.028 | GABIONS |

GABION DOWNCHUTE DETAIL (13)
NTS

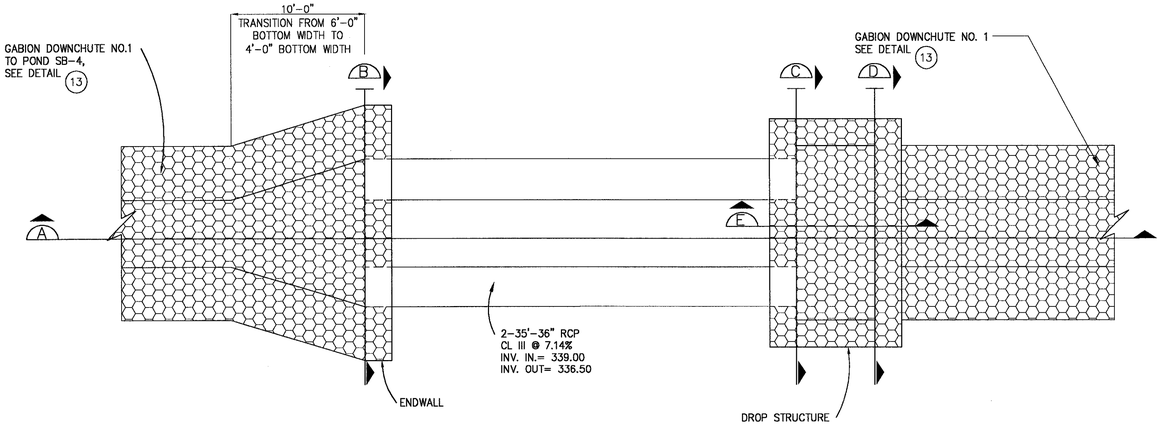


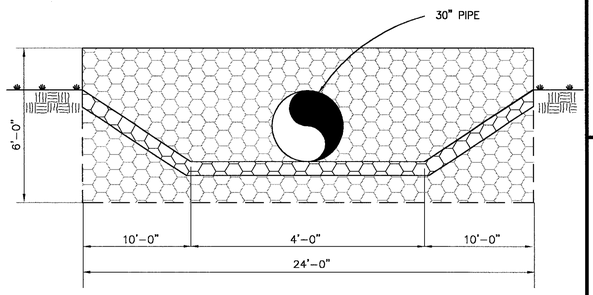


NOTE: GABION ENDWALL TO BE TWO FEET THICK.

GABION ENDWALL DETAIL (14A)
NTS

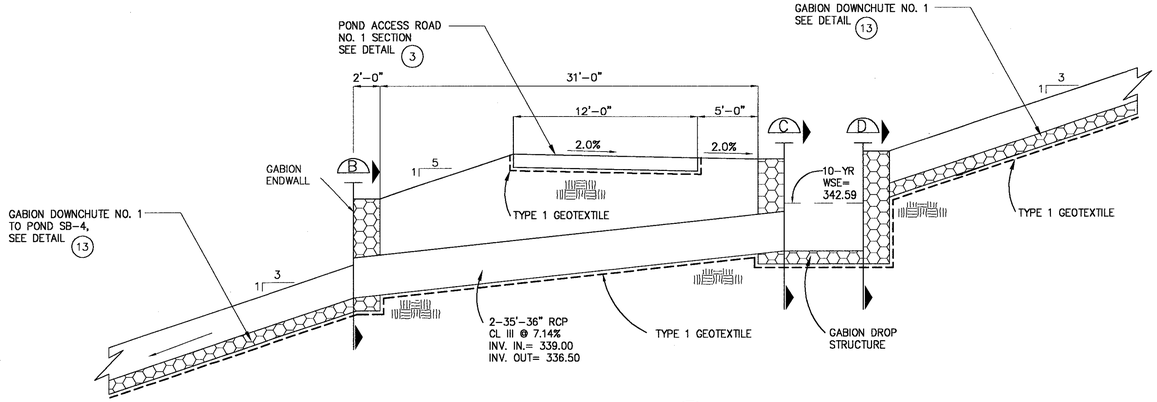


SECTION (A)

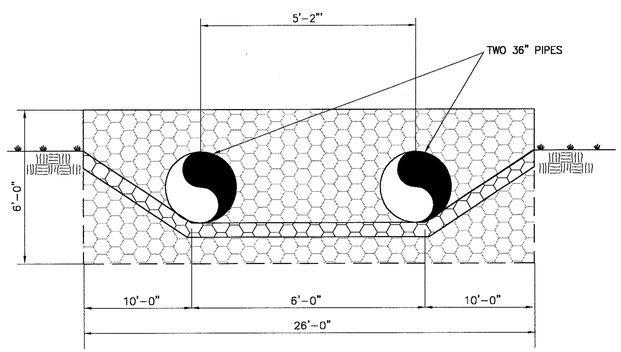


ENDWALL SECTION (B)

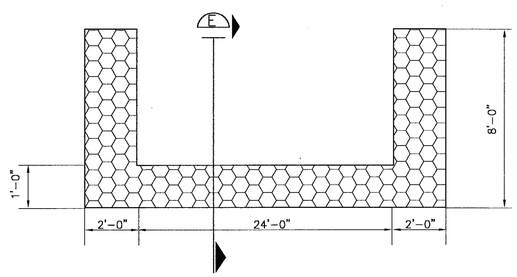


DROP STRUCTURE SECTION (C)

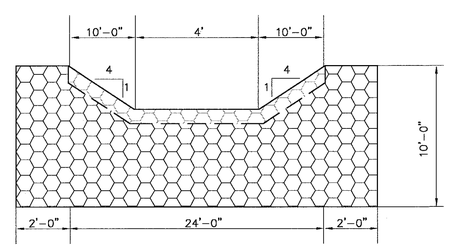


DOWNCHUTE/DROP
STRUCTURE SECTION (D)

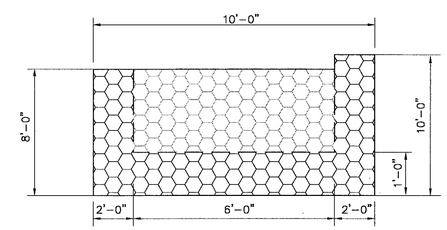


DROP STRUCTURE SECTION (E)

MAINTENANCE ROAD DOWNCHUTE INTERSECTION DETAIL (14)
NTS

SWS
11708 BOWMAN GREEN DRIVE RESTON, VIRGINIA 20190
PHONE: (703) 834-0271
FAX: (703) 834-6181

REUSE OF DOCUMENTS
THIS DOCUMENT, AND THE IDEAS AND DESIGNS INCORPORATED HEREIN, AS AN INSTRUMENT OF PROFESSIONAL SERVICE, IS THE PROPERTY OF SOLID WASTE SERVICES, LLC AND THE COUNTY OF LOUDOUN, VIRGINIA AND SHALL NOT BE COPIED OR USED, IN WHOLE OR IN PART FOR ANY PURPOSE WITHOUT THE WRITTEN AUTHORIZATION OF SOLID WASTE SERVICES, LLC OR THE COUNTY OF LOUDOUN, VIRGINIA.
© SOLID WASTE SERVICES, LLC

SECTIONS AND DETAILS
WOODS ROAD DISPOSAL UNIT
PRIMARY INFRASTRUCTURE
LOUDOUN COUNTY, VIRGINIA

PLAN STATUS

| DATE | DESCRIPTION |
|---|---|

| GA DESIGN | GA DRAWN | FA CHKD |
|---|---|---|
| SCALE H: N/A V: | | |
| DATE 01/22/08 | | |