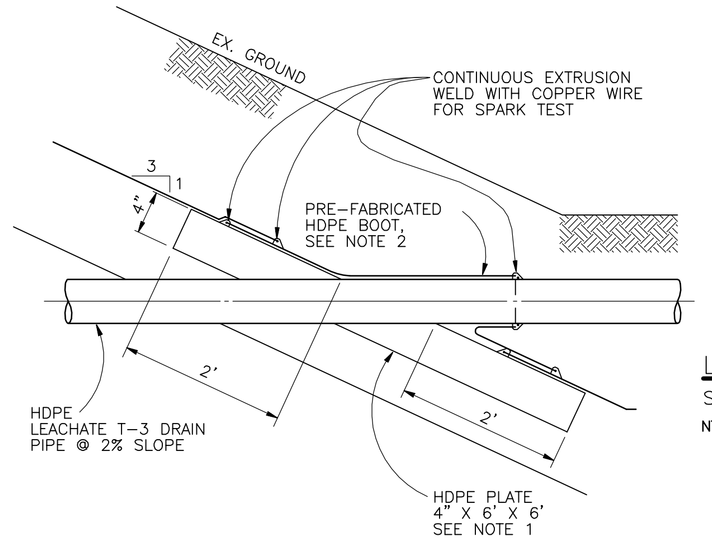

NOTES:

1. HDPE PLATE SHALL BE FACTORY BORED, WELDED TO 3" HDPE PIPE, AND TESTED FOR LEAKAGE.
2. HDPE BOOT SHALL BE WELDED TO HDPE PIPE AND THE WELD SPARK-TESTED BEFORE INSTALLATION OF THE HDPE PIPE.

LINER PENETRATION

SEE PLAN SHEET PP-01 T-3 DRAIN PROFILE

NTS

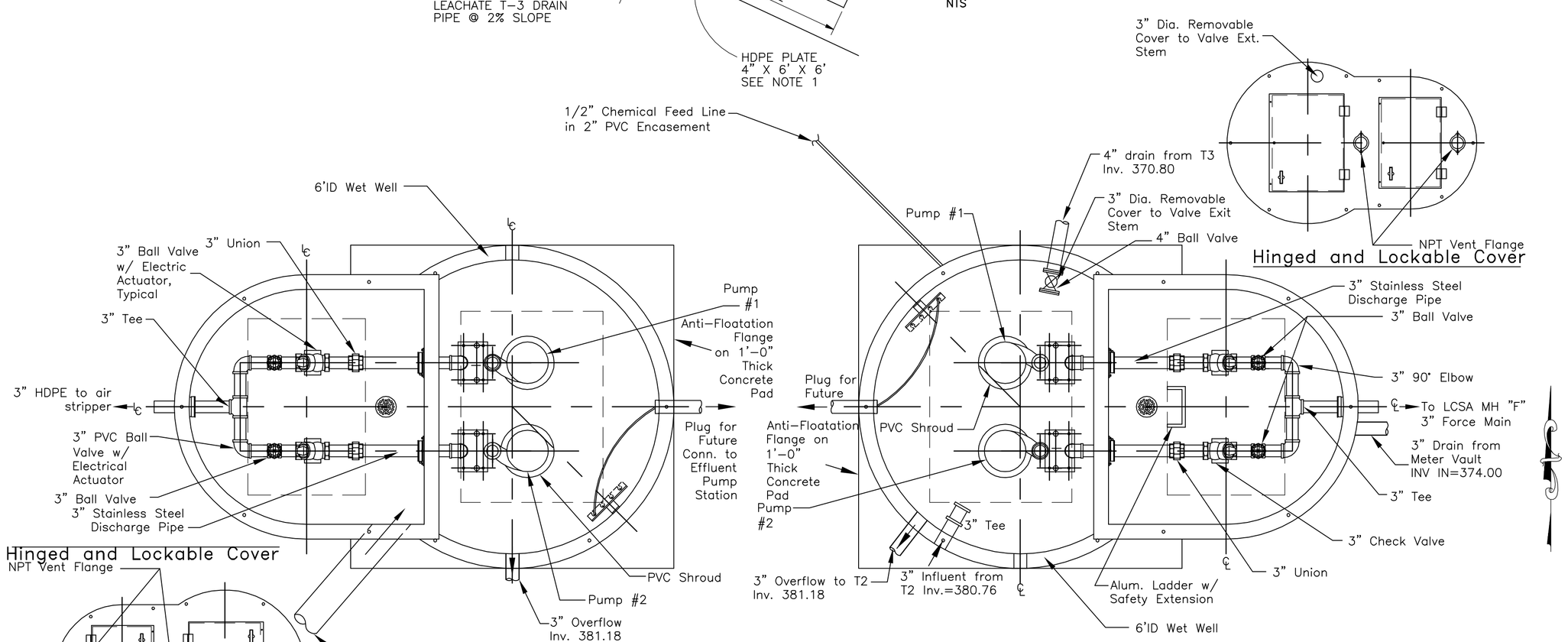

NE AIR STRIPPER INFLUENT PUMP STATION PLAN

SCALE: NTS

SEE TYPICAL SECTION VIEW BELOW

NEW AIR STRIPPER EFFLUENT PUMP STATION PLAN

SCALE: NTS

SEE TYPICAL SECTION VIEW BELOW

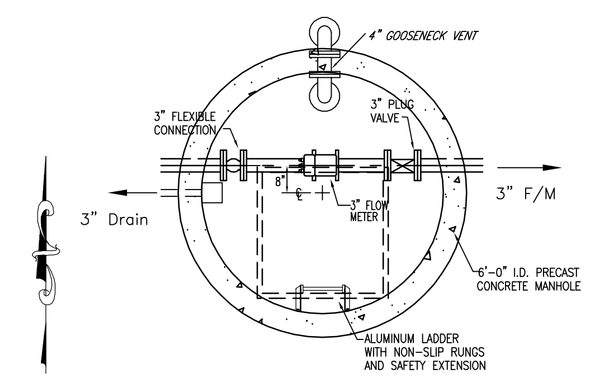

PLAN

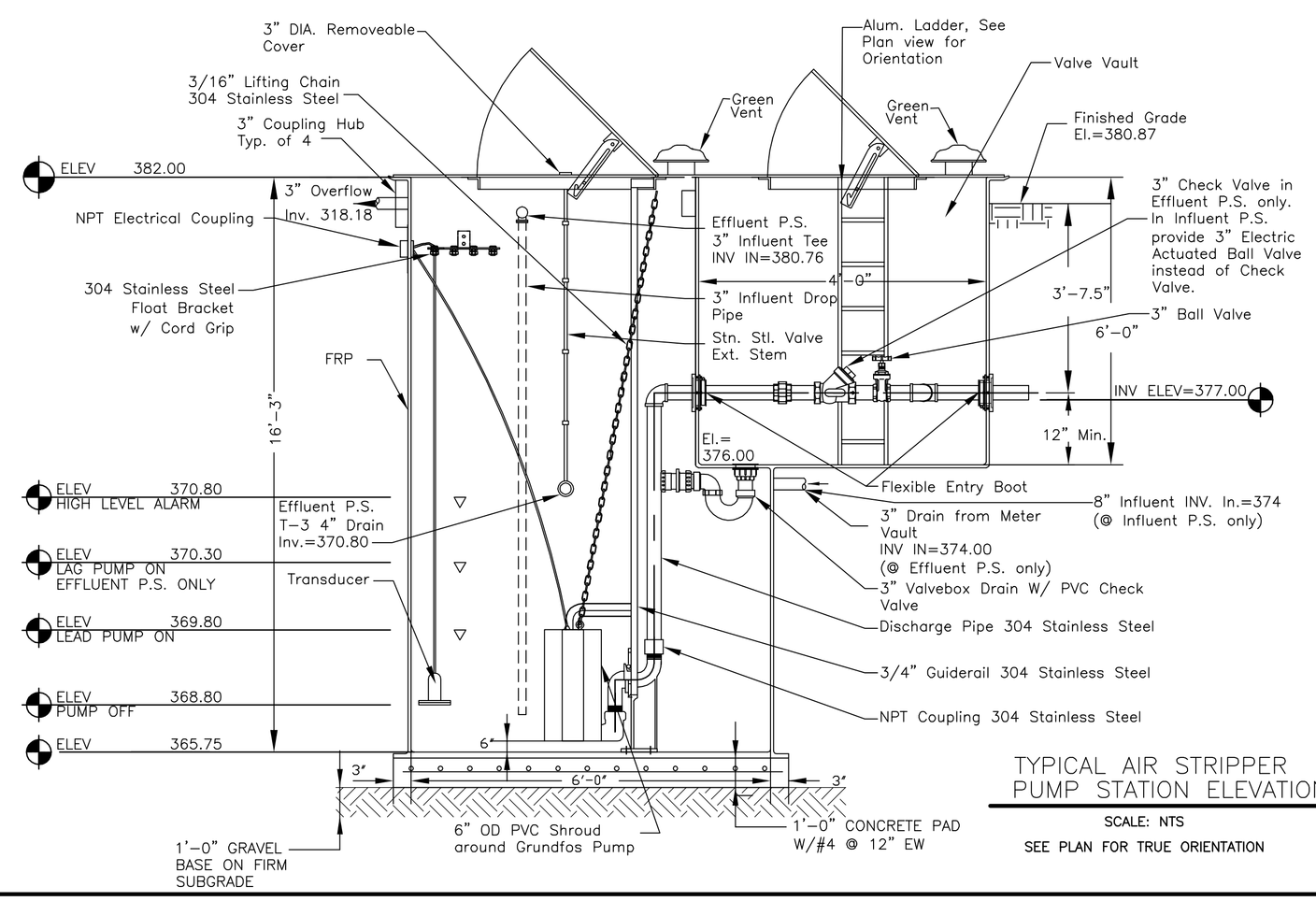

TYPICAL AIR STRIPPER PUMP STATION ELEVATION

SCALE: NTS

SEE PLAN FOR TRUE ORIENTATION

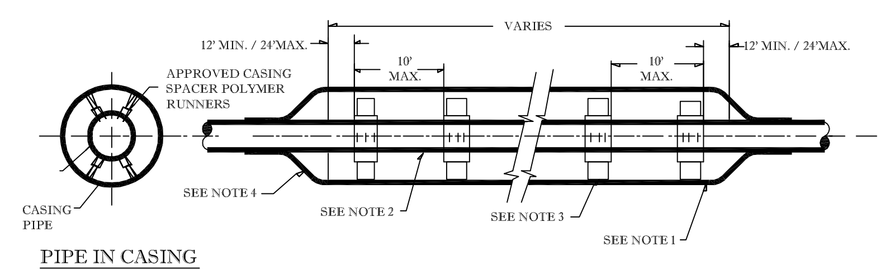

PIPE IN CASING END VIEW

STEEL CASING PIPE DETAIL

NO SCALE

NOTES:

1. Casing pipe shall be smooth wall carbon steel pipe, joints shall be squared and continuously welded. Wall thickness: 42" ID and greater - .5"
   36" ID and less - 0.375"
2. Carrier pipe shall be HDPE.
3. Casing spacers shall be carbon steel with polyvinyl chloride coating as manufactured by PSI or stainless steel as manufactured by Cascade Waterworks Inc. or approved equal. Runner width shall be a minimum of 2".
4. End closures: Casing end seals shall be pull-on type molded from synthetic rubber or approved equel. Seals shall be attached to casing pipe by band clamps. Band clamps shall be type 304 stainless steel. Seals shall have molded seats for proper location of bands.

CASING PIPE DETAIL

SEE PLAN SHEET PP-01 AND PP-05 (EXISTING CASING)

SCALE: NTS

CASING PIPE SIZES		
FORCE MAIN PIPE SIZE (INCHES)	CASING PIPE SIZE (INCHES)	CASING THICKNESS (BLACK SEAMLESS STEEL PIPE) (INCHES)
3	12	0.375

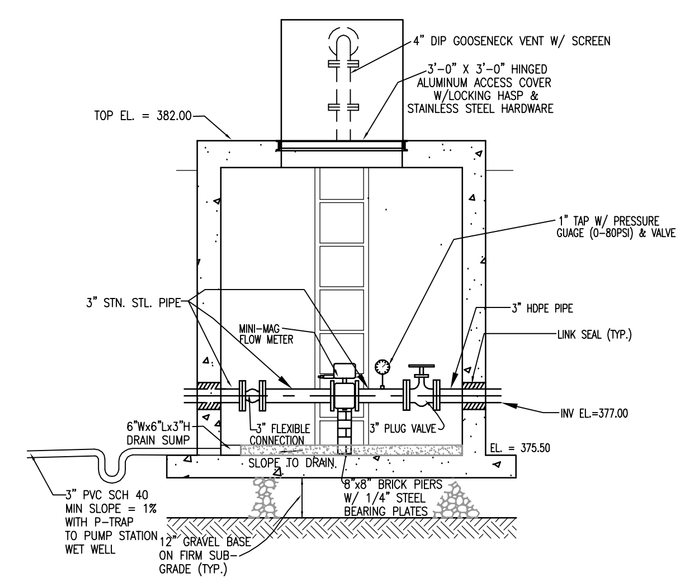

METER VAULT ELEVATION

SCALE: 3/8"=1'-0"

Dewberry

Dewberry & Davis LLC
8401 ARLINGTON BLVD.
FAIRFAX, VA 22031
PHONE: 703.849.0100
FAX: 703.849.0118

LOUDOUN COUNTY SOLID WASTE MANAGEMENT FACILITY

LEACHATE PUMP STATIONS & FORCE MAIN

LOUDOUN COUNTY, VIRGINIA

SEAL

COMMONWEALTH OF VIRGINIA
JEFFREY B. CHAPIN
Lic. No.9519
12/8/09
PROFESSIONAL ENGINEER

SCALE

No.	DATE	BY	Description

REVISIONS

DRAWN BY	YR
APPROVED BY	ARM
CHECKED BY	JBC
DATE	4/7/09

TITLE

PUMP STATION DETAILS

PROJECT NO. 50006147

M-01

SHEET NO. 5 OF 12

R:\MEED\50006147 - Loudoun County Landfill Leachate PS\CAD\Deliverables\06 M-01.dwg Dec 08, 2009 - 12:26pm