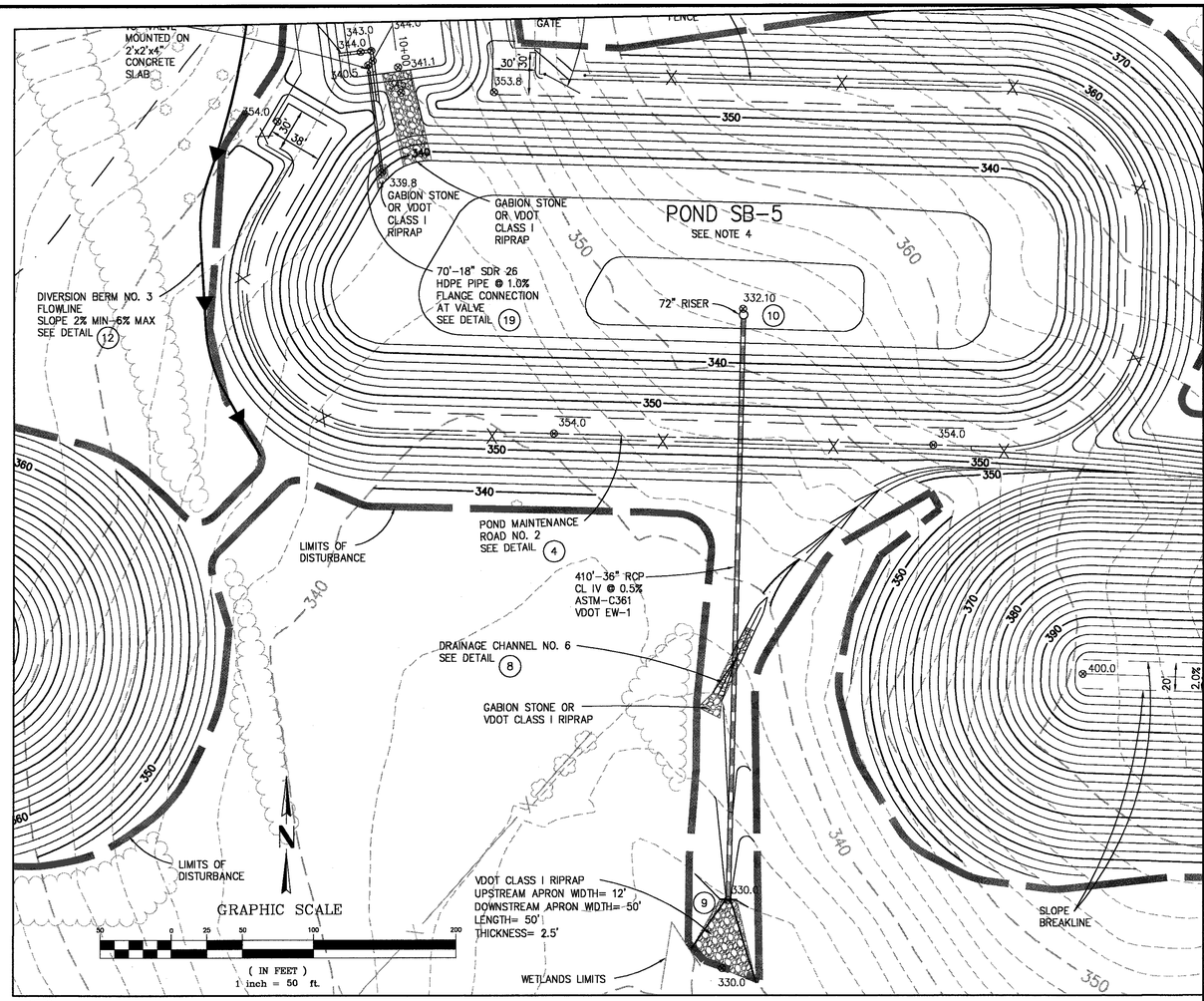

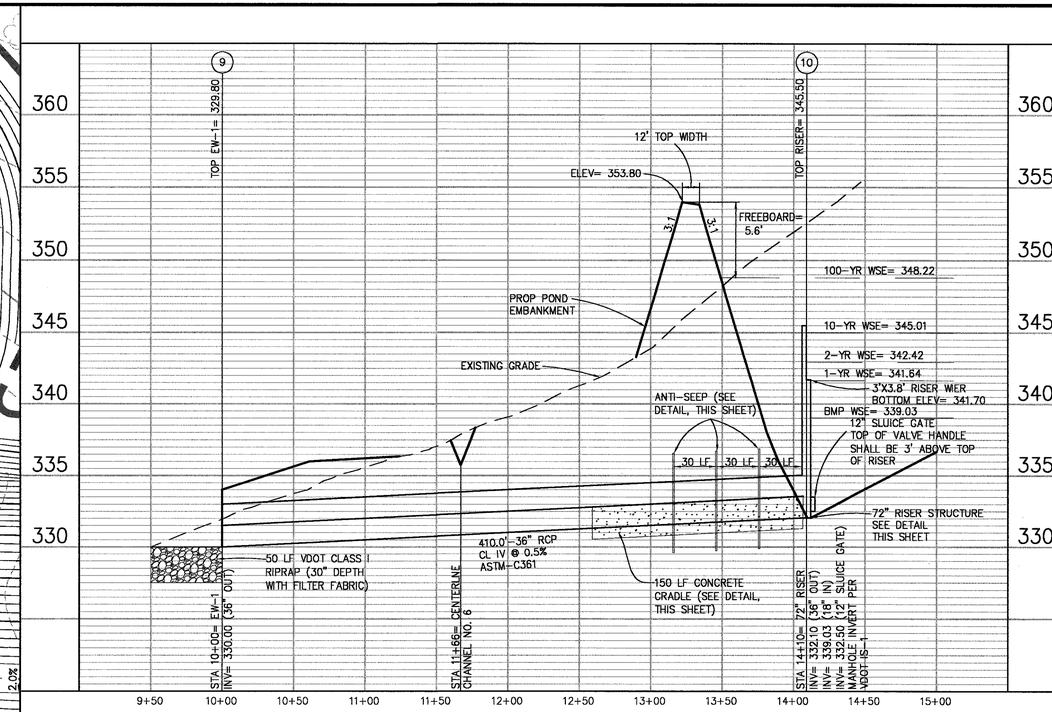

POND SB-5 PROFILE

SCALE: 1"= 50' HORIZ
1"= 5' VERT

NOTES:

1. TOPOGRAPHIC MAP PREPARED BY AIR SURVEY CORPORATION, DULLES, VIRGINIA USING PHOTOGRAMMETRIC METHODS FROM AERIAL PHOTOGRAPHY DATED SEPTEMBER 30, 2007.
2. NAD 1983 AND NAVD 1988.
3. ALL GRADES TO BE A MINIMUM SLOPE OF 2% AND A MAXIMUM SLOPE OF 3:1 UNLESS OTHERWISE SPECIFICALLY APPROVED BY THE ENGINEER OR NOTED.
4. SB-5 TO BE CLEANED OUT AND REGRADED TO DESIGN GRADES AT THE END OF THE PROJECT.

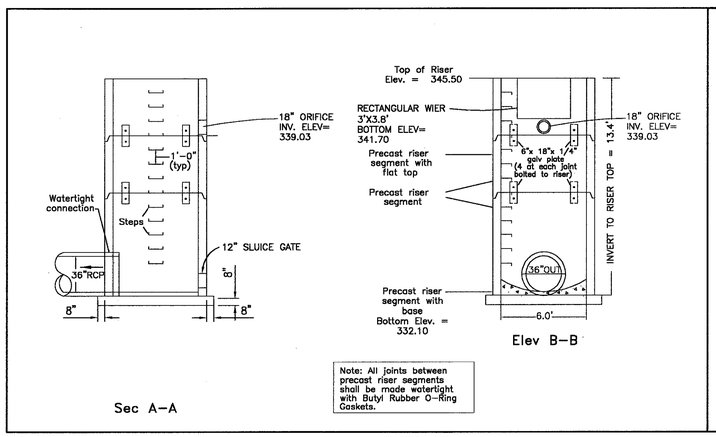

RISER STRUCTURE DETAIL

(NOT TO SCALE)

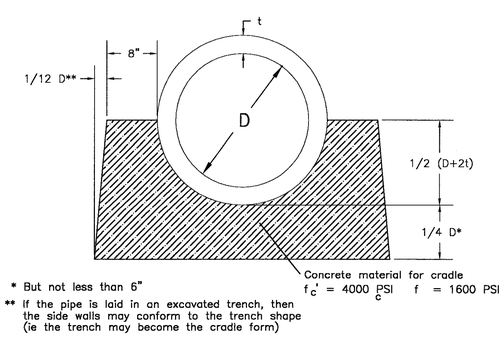

* But not less than 6"

** If the pipe is laid in an excavated trench, then the side walls may conform to the trench shape (ie the trench may become the cradle form)

CONCRETE CRADLE DETAIL

(NOT TO SCALE)

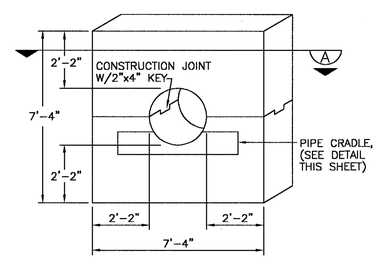

NOTES:

1. ANTI-SEEP COLLAR TO BE POURED AT LEAST TWO (2) FEET FROM NEAREST PIPE JOINT
2. ANTI-SEEP COLLAR IS TO BE CONSTRUCTED IN TWO (2) POURS.
3. BOTTOM HALF TO BE POURED WITH THE PIPE CRADLE. A FULL FLATSTRIP WATERSTOP SHALL BE INSTALLED IN THE JOINT BETWEEN THE TOP AND BOTTOM OF THE ANTI-SEEP COLLAR. A PROTECTIVE COVER SHALL BE USED OVER THE EXPOSED WATERSTOP UNTIL THE TOP HALF IS POURED.
4. TOP HALF TO BE POURED WITH THE PIPE IN PLACE.
5. BACKFILL SHALL BE PLACED EVENLY ON BOTH SIDES OF THE ANTI-SEEP COLLAR.
6. REINFORCED CONCRETE: fc = 4,000 psi @ 28 DAYS.

ANTI-SEEP COLLAR DETAIL

(NOT TO SCALE)

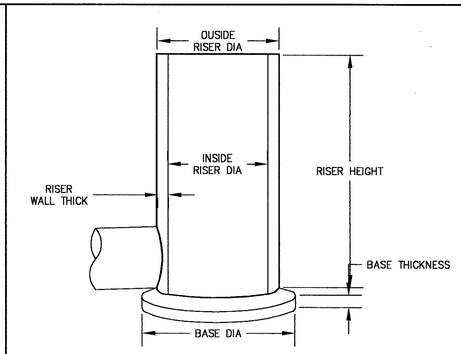

OUTFALL STRUCTURE SCHEMATIC

(NOT TO SCALE)

POND: BUOYANCY CALCULATIONS - SWM BMP CONTROL RISER

RISER INSIDE DIA=	6.00	FT	(Rd)
RISER WALL THICK=	0.67	FT	(Rw)
RISER OUTSIDE DIA=	7.33	FT	(RO)
RISER HEIGHT =	13.4	FT	(Rh)
BASE DIAMETER=	8.67	FT	(Bd)
BASE THICKNESS=	0.67	FT	(Bt)

*Weight of soil over exterior base footing and trash rack is omitted.

VOLUME OF CONCRETE IN BASE (Vb) =
PI * (Bd^2)/4 *Bt = 39.59 CF

VOLUME OF CONCRETE IN RISER (Vr) =
[(PI * (RO^2)/4) - (PI * (Rd^2)/4)] * Rh = 187.10 CF

WEIGHT OF CONCRETE RISER & BASE =
(Vb + Vr - Vs) * 220lb/CF = 49,871 lbs.

WATER VOLUME DISPLACED BY RISER (Vd) =
PI * (RO^2)/4 *Rh = 565.98 CF

BUOYANT FORCE (BF) = Vd * 62.4lb/CF = 35,317 lbs.

FACTOR OF SAFETY= 1.41

RISER BUOYANCY CALCULATIONS

SWS
11706 BOWMAN GREEN DRIVE RESTON, VIRGINIA 20190
PHONE: (703) 834-0701
FAX: (703) 834-6181

REUSE OF DOCUMENTS
THIS DOCUMENT, AND THE IDEAS AND DESIGNS INCORPORATED HEREIN, AS AN INSTRUMENT OF PROFESSIONAL SERVICE, IS THE PROPERTY OF SOLID WASTE SERVICES, LLC. AND THE COUNTY OF LOUDOUN, VIRGINIA AND IS TO NOT BE COPIED OR USED, IN WHOLE OR IN PART FOR ANY PURPOSE WITHOUT THE WRITTEN AUTHORIZATION OF SOLID WASTE SERVICES, LLC OR THE COUNTY OF LOUDOUN, VIRGINIA
© SOLID WASTE SERVICES, LLC

POND SB-5 PLAN AND PROFILE

WOODS ROAD DISPOSAL UNIT PRIMARY INFRASTRUCTURE

LOUDOUN COUNTY, VIRGINIA

PLAN STATUS	
DATE	DESCRIPTION
GA DESIGN	GA DRAWN / FA CHKD
SCALE	H: SEE SHEET V:
DATE 01/22/08	