SURVEYED BY .....
SUPERVISED BY.....
DESIGNED BY.....

TEMPORARY SEDIMENT TRAP DETAIL SHEET

DESIGN FEATURES RELATING TO CONSTRUCTION OR TO REGULATION AND CONTROL OF TRAFFIC MAY BE SUBJECT TO CHANGE AS DEEMED NECESSARY BY THE DEPARTMENT

REVISED	STATE	FEDERAL AID PROJECT	STATE ROUTE	STATE PROJECT	SHEET NO.
7/17/08	VA.				2L(21)

IN PROGRESS 092608
NOT FOR CONSTRUCTION

TEMPORARY SEDIMENT TRAP TABLE

	SEDIMENT TRAP INFORMATION	SECTION THRU TEMPORARY SEDIMENT TRAP	SECTION THRU WEIR	SIDE SLOPES (SS)	WET STORAGE ELEV. (C)	DRY STORAGE ELEV. (B)	ESTIMATED QUANTITES: SEDIMENT BASIN EXCAVATION CU. YARDS	SILTATION CONTROL EXCAVATION CU. YARDS	DRY RIP RAP CLASS AI TONS	REMARKS
SHEET NO. STATION NO. TRAP NO.	2L(6) 118+00 - 607 1	B= 28 W= 14 ELEV. D= 248.0 T= 2.0	L= 4 Elev. B = 252.0	2:1	251.0	252.0				CONTRIBUTING AREA = 0.65 AC REQ'D WET STORAGE (PROVIDED) = 43.6 CY (79.9 CY) REQ'D DRY STORAGE (PROVIDED) = 43.6 CY (43.7 CY)
SHEET NO. STATION NO. TRAP NO.	2L(6) 120+50 - 607 2	B= 28 W= 14 ELEV. D= 246.0 T= 2.5	L= 5 Elev. B = 251.0	2:1	249.0	251.0				CONTRIBUTING AREA = 0.69 AC REQ'D WET STORAGE (PROVIDED) = 46.2 CY (79.9 CY) REQ'D DRY STORAGE (PROVIDED) = 46.2 CY (98.4 CY)
SHEET NO. STATION NO. TRAP NO.	2L(6) 121+50 - 607 3	B= 36 W= 18 ELEV. D= 248.0 T= 3.0	L= 16 Elev. B = 255	2:1	252.0	255.0				CONTRIBUTING AREA = 2.55 AC REQ'D WET STORAGE (PROVIDED) = 170.9 CY (180.7 CY) REQ'D DRY STORAGE (PROVIDED) = 170.9 CY (261.8 CY) * PIPE OUTLET REQ'D
SHEET NO. STATION NO. TRAP NO.	2L(3) 428+00 - 7WB 4	B= 38 W= 19 ELEV. D= 237.0 T= 3.0	L= 17 Elev. B = 244.0	2:1	241.0	244.0				CONTRIBUTING AREA = 2.70 AC REQ'D WET STORAGE (PROVIDED) = 180.9 CY (193.6 CY) REQ'D DRY STORAGE (PROVIDED) = 180.9 CY (277.3 CY) * PIPE OUTLET REQ'D
SHEET NO. STATION NO. TRAP NO.	2L(3) 427+00 - 7WB 5	B= 20 W= 10 ELEV. D= 238.5 T= 2.5	L= 5 Elev. B = 243.5	2:1	241.5	243.5				CONTRIBUTING AREA = 0.67 AC REQ'D WET STORAGE (PROVIDED) = 44.9 CY (50.8 CY) REQ'D DRY STORAGE (PROVIDED) = 44.9 CY (70.5 CY)
SHEET NO. STATION NO. TRAP NO.	2L(3) 426+00 - 7WB 6	B= 16 W= 8 ELEV. D= 238.0 T= 2.5	L= 6 Elev. B = 244.0	2:1	242.0	244.0				CONTRIBUTING AREA = 0.87 AC REQ'D WET STORAGE (PROVIDED) = 58.3 CY (67.8 CY) REQ'D DRY STORAGE (PROVIDED) = 58.3 CY (75.9 CY)
SHEET NO. STATION NO. TRAP NO.	2L(4) 15+00 - B 7	B= 28 W= 14 ELEV. D= 234.0 T= 3.0	L= 8 Elev. B = 240.0	2:1	237.5	240.0				CONTRIBUTING AREA = 1.20 AC REQ'D WET STORAGE (PROVIDED) = 80.4 CY (101.6 CY) REQ'D DRY STORAGE (PROVIDED) = 80.4 CY (145.9 CY) * PIPE OUTLET REQ'D
SHEET NO. STATION NO. TRAP NO.	2L(5) 13+50 - B 8	B= 32 W= 16 ELEV. D= 232.0 T= 3.0	L= 11 Elev. B = 238.0	2:1	235.5	238.0				CONTRIBUTING AREA = 1.75 AC REQ'D WET STORAGE (PROVIDED) = 117.3 CY (124.3 CY) REQ'D DRY STORAGE (PROVIDED) = 117.3 CY (167.6 CY) * PIPE OUTLET REQ'D
SHEET NO. STATION NO. TRAP NO.	2L(5) 23+00 - C 9	B= 28 W= 14 ELEV. D= 230.0 T= 3.0	L= 7 Elev. B = 236.0	2:1	233.5	236.0				CONTRIBUTING AREA = 1.12 AC REQ'D WET STORAGE (PROVIDED) = 75.0 CY (101.6 CY) REQ'D DRY STORAGE (PROVIDED) = 75.0 CY (145.9 CY) * PIPE OUTLET REQ'D
SHEET NO. STATION NO. TRAP NO.	2L(4) 21+00 - C 10	B= 32 W= 16 ELEV. D= 230.5 T= 2.5	L= 9 Elev. B = 236.0	2:1	233.5	236.0				CONTRIBUTING AREA = 1.41 AC REQ'D WET STORAGE (PROVIDED) = 94.7 CY (96.8 CY) REQ'D DRY STORAGE (PROVIDED) = 94.7 CY (151.3 CY)
SHEET NO. STATION NO. TRAP NO.	2L(4) 17+00 - C 11	B= 44 W= 22 ELEV. D= 232.0 T= 2.5	L= 11 Elev. B = 238.0	2:1	233.0	238.0				CONTRIBUTING AREA = 2.78 AC REQ'D WET STORAGE (PROVIDED) = 186.3 CY (197.6 CY) REQ'D DRY STORAGE (PROVIDED) = 186.3 CY (242.0 CY)
SHEET NO. STATION NO. TRAP NO.	2L(4) 21+00 - D 12	B= 30 W= 15 ELEV. D= 233.5 T= 3.0	L= 10 Elev. B = 240.0	2:1	237.5	240.0				CONTRIBUTING AREA = 1.58 AC REQ'D WET STORAGE (PROVIDED) = 105.9 CY (138.8 CY) REQ'D DRY STORAGE (PROVIDED) = 105.9 CY (172.3 CY) * PIPE OUTLET REQ'D
SHEET NO. STATION NO. TRAP NO.	2L(3) 428+50 - 7WB 13	B= 18 W= 9 ELEV. D= 237.5 T= 3.0	L= 7 Elev. B = 244.0	2:1	241.5	244.0				CONTRIBUTING AREA = 1.02 AC REQ'D WET STORAGE (PROVIDED) = 68.4 CY (77.4 CY) REQ'D DRY STORAGE (PROVIDED) = 68.4 CY (110.7 CY) * PIPE OUTLET REQ'D
SHEET NO. STATION NO. TRAP NO.	2L(7) 140+00 - 607 14	B= 12 W= 6 ELEV. D= 226.0 T= 2.5	L= 5 Elev. B = 232.0	2:1	230.0	232.0				CONTRIBUTING AREA = 0.749 AC REQ'D WET STORAGE (PROVIDED) = 50.2 CY (51.6 CY) REQ'D DRY STORAGE (PROVIDED) = 50.2 CY (62.9 CY)

WEIR (ROCK CHECK DAM TYPE I)
(SEE ROAD AND BRIDGE STD. EC-4
FOR DETAILS NOT SHOWN)

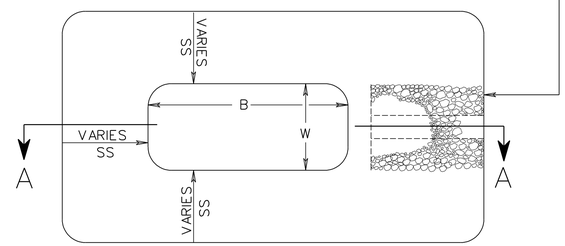

PLAN VIEW OF TEMPORARY SEDIMENT TRAP

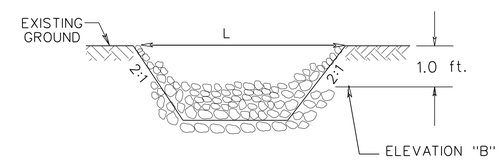

TYPICAL SECTION THRU WEIR
(ROCK CHECK DAM TYPE 1)

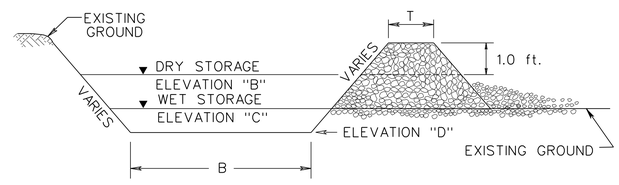

TYPICAL SECTION (AA) THRU
TEMPORARY SEDIMENT TRAP

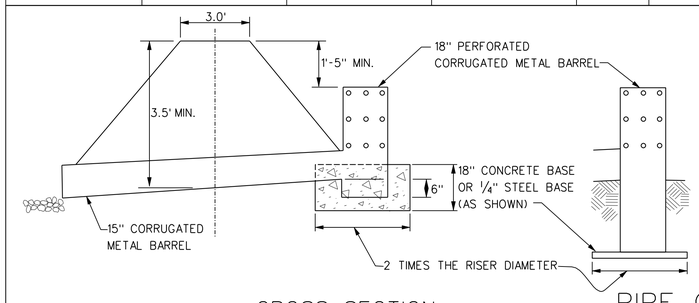

CROSS SECTION

THESE ARE THE RECOMMENDED STANDARD SPECIFICATIONS FOR THE PIPE OUTLET SEDIMENT TRAP. THE DESIGN ENGINEER MAY ALTER THE PIPE AND PERFORATION SIZES, PROVIDED ENGINEERING CALCULATIONS CAN JUSTIFY IT. THE DESIRED DRAWDOWN TIMES ARE A MINIMUM OF 4 HOURS; AND A MAXIMUM OF 40 HOURS. THE PERFORATION SIZE AND SPACING AS INDICATED BELOW REPRESENTS APPROXIMATELY A 17 HOUR DRAWDOWN TIME. WHEN SELECTING A DRAWDOWN TIME, THE DESIGN ENGINEER MUST CONSIDER THE PROXIMITY TO EXISTING RESIDENCES AND THE SAFETY OF SMALL CHILDREN; THUS, A SHORTER DRAWDOWN TIME. FOR REMOTE SITES, A LONGER DRAWDOWN TIME WOULD BE MORE APPROPRIATE.

PIPE OULET SEDIMENT TRAP
(1 TO 3 ACRES OF DISTURBED AREA)

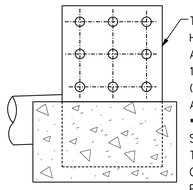

THREE ROWS OF 1-INCH HOLES SPACED 6 INCHES APART VERTICALLY; AND 12 INCHES HORIZONTALLY. (9 HOLES TOTAL).
A GRAVEL CONE OF VDOT #1 CRUSHED AGGREGATE SHALL BE PLACED AROUND THE RISER TO PREVENT CLOGGING OF THE PERFORATIONS.

PERFORATED RISER
DETAIL

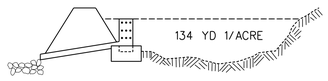

STORAGE VOLUME REQUIRED

COMMONWEALTH OF VIRGINIA
DAVID JOHN MAHONEY
Lic. No. 020798
PROFESSIONAL ENGINEER

NEW 6/01

SPECIAL DESIGN SECTION
DRAWING NO. A-6

PLAN NO.	PROJECT	FILE NO.	SHEET NO.
			2L(21)

$TIME$ST/MP$